PERMIT SITE PLAN
FLEXIBLE DEVELOPMENT

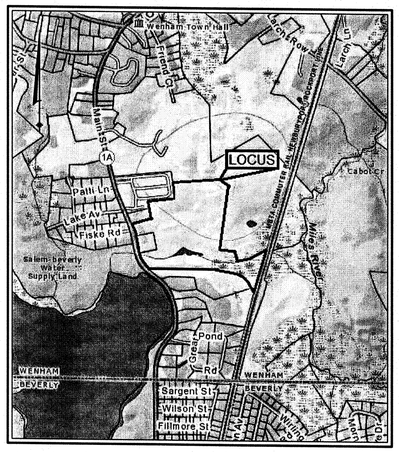

LOCATION MAP
SCALE: 1"=1000'

Wenham Pines
56/60 MAIN STREET
WENHAM, MASSACHUSETTS 01984

FOR

WENHAM PINES LLC

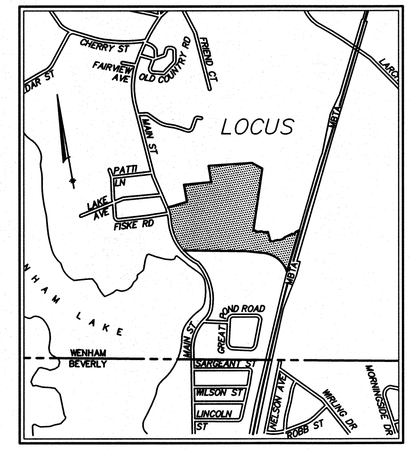

LOCUS MAP
SCALE: 1"=1000'

OWNER:

ESTATE OF WILLIAM J. FLYNN
5 BARKER ROAD
BOXFORD, MASSACHUSETTS 01921

APPLICANT:

WENHAM PINES LLC
6 KIMBALL LANE
LYNNFIELD, MASSACHUSETTS 01940

SHEET INDEX
RYAN ASSOCIATES
(LANDSCAPE ARCHITECT)

L-1.0 ..... OVERALL SITE PLAN
L-1.1 ..... SITE PLAN
L-1.2 ..... SITE PLAN
L-1.3 ..... SITE PLAN
L-2.0 ..... PLANTING AND MATERIALS ENTRY
L-2.1 ..... PLANTING AND MATERIALS UNITS 2/4 AND 6/8
L-3.0 ..... LIGHTING PLAN
L-4.0 ..... MANAGEMENT PLAN
L-4.1 ..... MANAGEMENT PLAN
L-4.2 ..... MANAGEMENT PLAN
L-5.0 ..... IRRIGATION PLAN
L-6.0 ..... DETAILS
L-6.1 ..... DETAILS
L-6.2 ..... DETAILS

SHEET INDEX
HANCOCK ASSOCIATES
(CIVIL ENGINEER & LAND SURVEYOR)

SHEET 1 ..... TITLE SHEET
SHEET 2 ..... NOTES, REFERENCES & LEGEND SHEET
SHEET 3-6 ..... EXISTING CONDITIONS PLAN
SHEET 7 ..... YIELD PLAN
SHEET 8 ..... MASTER PLAN
SHEET 9 ..... SOILS AND ABUTTERS
SHEET 10 ..... DEMOLITION PLAN
SHEET 11-13 ..... LAYOUT AND MATERIALS PLAN
SHEET 14-17 ..... GRADING AND DRAINAGE PLAN
SHEET 18-19 ..... ROADWAY AND UTILITY PROFILE
SHEET 20-22 ..... SEWAGE PROFILE
SHEET 23 ..... COMBINED UTILITY PLAN
SHEET 24 ..... DETAILS SHEET 1
SHEET 25 ..... DETAILS SHEET 2
SHEET 26 ..... TEST PIT LOG
SHEET 27 ..... SEWER AND SEPTIC DETAILS
SHEET 28 ..... OPEN SPACE PLAN
SHEET 29 ..... FLEXIBLE DEVELOPMENT LAYOUT PLAN
SHEET 30-34 ..... PRECAST CONCRETE BRIDGE BY CONTECH

SHEET INDEX
GRAZADO VELLECO ARCHITECTS
(ARCHITECT)

A-1 ..... TYPE A FLOOR PLANS
A-2 ..... TYPE B FLOOR PLANS
A-3 ..... TYPICAL FRONT ELEVATION
A-4 ..... TYPICAL SIDE ELEVATION
A-5 ..... TYPICAL REAR ELEVATION
A-6 ..... POSTAL STRUCTURE

H-E1 ..... EXISTING FLOOR PLANS
H-E2 ..... EXISTING FLOOR PLANS
H-E3 ..... EXISTING ELEVATIONS
H-E4 ..... EXISTING ELEVATIONS
H-A1 ..... PROPOSED FLOOR PLANS
H-A2 ..... PROPOSED ELEVATIONS
H-A3 ..... PROPOSED ELEVATIONS
H-A4 ..... PROPOSED GARAGE

GENERAL NOTES

1. LOCATIONS OF EXISTING UNDERGROUND UTILITIES/OBSTRUCTIONS/SYSTEMS SHOWN HEREON ARE APPROXIMATE ONLY. ALL UTILITIES/OBSTRUCTIONS/SYSTEMS MAY NOT BE SHOWN. CONTRACTOR SHALL BE RESPONSIBLE FOR LOCATING AND PROTECTING ALL UNDERGROUND UTILITIES/OBSTRUCTIONS/SYSTEMS, WHETHER OR NOT SHOWN HEREON.
2. UNLESS OTHERWISE SHOWN, ALL NEW UTILITIES SHALL BE UNDERGROUND.
3. SAFETY MEASURES, CONSTRUCTION METHODS AND CONTROL OF WORK SHALL BE THE RESPONSIBILITY OF THE CONTRACTOR.
4. CONTRACTOR SHALL BE RESPONSIBLE FOR REPAIR AND/OR REPLACEMENT OF ANY EXISTING IMPROVEMENTS DAMAGED DURING CONSTRUCTION THAT ARE NOT DESIGNATED FOR DEMOLITION AND/OR REMOVAL HEREON. DAMAGED IMPROVEMENTS SHALL BE REPAIRED TO THE SATISFACTION OF THEIR RESPECTIVE OWNERS.
5. ANY INTENDED REVISION OF THE HORIZONTAL AND/OR VERTICAL LOCATION OF IMPROVEMENTS TO BE CONSTRUCTED AS SHOWN HEREON SHALL BE REVIEWED AND APPROVED BY ENGINEER PRIOR TO IMPLEMENTATION.
6. RIM ELEVATIONS SHOWN FOR NEW STRUCTURES ARE APPROXIMATE AND ARE PROVIDED TO ASSIST CONTRACTOR WITH MATERIAL TAKEOFFS. FINISH RIM ELEVATIONS SHOULD MATCH PAVEMENT, GRADING, OR LANDSCAPING, UNLESS SPECIFICALLY INDICATED OTHERWISE.
7. WHERE EXISTING UTILITY LINES/STRUCTURES ARE TO BE CUT/BROKEN DOWN/ABANDONED, LINES/STRUCTURES SHALL BE PLUGGED/CAPPED/FILLED, IN ACCORDANCE WITH OWNER REQUIREMENTS.
8. IN CERTAIN INSTANCES, IN ORDER TO DESIGN GRAVITY FLOW IMPROVEMENTS, ENGINEER MUST RELY ON PIPE INVERT ELEVATIONS OBTAINED AT ACCESSIBLE STRUCTURES AND/OR RECORD PIPE SLOPE DATA OBTAINED FROM LOCAL AUTHORITIES. PRIOR TO COMMENCEMENT OF CONSTRUCTION, CONTRACTOR SHALL VERIFY GRADES (VIA POTHOLING OR OTHER METHODS) OF EXISTING GRAVITY FLOW UTILITIES INTENDED TO SERVE SITE AND BUILDINGS, INCLUDING SANITARY SEWER AND STORM DRAINS. THIS WORK IS NECESSARY TO ENSURE THAT ADEQUATE SLOPE EXISTS TO ALLOW FLOW OF SEWER SERVICES AND DRAINAGE SYSTEMS TO EXISTING UTILITY MAINS OR TO THEIR FINAL RUNOFF DESTINATION. **SHOULD SITE CONDITIONS DIFFER FROM DESIGN ELEVATIONS SHOWN HEREON,** CONTRACTOR SHALL SEEK DIRECTION FROM ENGINEER PRIOR TO PROCEEDING WITH WORK.
9. A GEOTECHNICAL REPORT SPECIFIC TO THIS DEVELOPMENT HAS NOT BEEN PREPARED. CONTRACTOR SHALL CONSULT WITH OWNER REGARDING SUBSURFACE CONDITIONS PRIOR TO CONSTRUCTION.
10. ALL SUBSURFACE CABLE CONDUIT SHALL BE SIZED AND INSTALLED IN ACCORDANCE WITH REQUIREMENTS AND/OR RECOMMENDATIONS OF THE APPROPRIATE UTILITY COMPANY AND THE TOWN OF WENHAM DEPARTMENT OF PUBLIC WORKS.
11. ELEVATIONS SHOWN HEREON REFER TO THE NATIONAL GEODETIC VERTICAL DATUM (NGVD) OF 1929 (MEAN SEA LEVEL OF 1929).
12. CONTRACTOR SHALL NOTIFY TOWN OF WENHAM WATER DEPARTMENT AS TO CONSTRUCTION SCHEDULE FOR VERIFICATIONS OF WATER MAIN LOCATIONS ALONG MAIN STREET.
13. CONTRACTOR SHALL BE RESPONSIBLE FOR THE STAKING OF PROPERTY LINES IN VICINITY OF PROPOSED WORK.
14. PAVEMENT ON MAIN STREET SHALL BE SAW-CUT AND NEATLY JOINTED TO NEW PAVEMENT. MAIN STREET SHALL BE RESTORED TO PRE-CONSTRUCTION CONDITIONS OR BETTER.
15. BLOW-OFF FOR HYDRANTS FROM 8" WATER MAIN WILL CONSIST OF AN 8"X6" REDUCER TO A 6" GATE VALVE TO HYDRANT.
16. UNDERGROUND UTILITIES SHOWN HEREON ARE COMPILED FROM FIELD LOCATIONS OF STRUCTURES AND FROM AVAILABLE RECORD INFORMATION ON FILE AT THE TOWN ENGINEERING OFFICES. OTHER UNDERGROUND UTILITIES MAY EXIST. IT SHALL BE THE RESPONSIBILITY OF THE CONTRACTOR TO VERIFY THE LOCATION, SIZE, AND ELEVATION OF ALL UTILITIES WITHIN THE AREA OF PROPOSED WORK, AND TO CONTACT "DIG-SAFE" AT 811 AT LEAST 72 HOURS PRIOR TO EXCAVATION, DEMOLITION, OR CONSTRUCTION
17. TEST PITS SHALL BE EXCAVATED AT ANY LOCATION WHERE THERE IS AN EXISTING UTILITY THAT IS BEING CROSSED BY ANY PROPOSED UTILITY, TO DETERMINE ACTUAL ELEVATIONS AND ADJUST TO MATCH EXISTING. THE CONTRACTOR/DEVELOPER WILL HAVE ALL FIELD REVISIONS APPROVED BY THE APPROPRIATE REPRESENTATIVE FROM THE TOWN OF WENHAM.
18. INDIVIDUAL UTILITY CONNECTIONS SHOWN ARE FOR ILLUSTRATION PURPOSES ONLY. FINAL LOCATIONS SHALL BE ADJUSTED FOR ACTUAL HOUSE DESIGN AND LAYOUT.
19. ANY AND ALL TRENCH WORK PERFORMED IN MAIN STREET SHALL COMPLY WITH THE FINAL MASSACHUSETTS DOT HIGHWAY DIVISION ACCESS PERMIT.
20. THE CONTRACTOR SHALL VERIFY THE LOCATION AND RELATIVE ELEVATION OF BENCH MARKS PRIOR TO COMMENCEMENT OF CONSTRUCTION. ANY DISCREPANCY SHALL BE REPORTED TO THE ENGINEER.
21. CONTRACTOR SHALL FURNISH CONSTRUCTION LAYOUT OF BUILDING AND SUBDIVISION IMPROVEMENTS. THIS WORK SHALL BE PERFORMED BY A PROFESSIONAL LAND SURVEYOR.
22. THIS PLAN IS NOT INTENDED TO SHOW AN ENGINEERED BUILDING FOUNDATION DESIGN, WHICH WOULD INCLUDE DETAILS AND FINAL ELEVATIONS OF FOOTINGS, WALLS AND SUBSURFACE DRAINAGE TO PREVENT INTERIOR FLOODING. SEE ARCHITECTURAL AND/OR STRUCTURAL DRAWINGS.
23. PROPOSED BUILDING FOUNDATION CONFIGURATION AND LOCATION ON THE LOT AS SHOWN ARE CONCEPTUAL AND SHALL BE VERIFIED AS TO CONFORMANCE WITH FINAL ARCHITECTURAL PLANS AND ZONING ORDINANCES PRIOR TO CONSTRUCTION.
24. ANY SILT FENCE AND/OR HAYBALES SHOWN HEREON SHALL BE INSTALLED BEFORE EARTH DISTURBANCE OCCURS WITHIN THE BUFFER ZONE, AND SHALL SERVE AS THE LIMIT OF WORK.
25. CONTRACTOR SHALL LOCATE THE EXISTING WATER MAIN AND GAS MAIN IN MAIN STREET PRIOR TO INSTALLATION OF THE PROPOSED WATER AND GAS CONNECTIONS.
26. ALL DRAINAGE PIPE SHALL BE CLASS V REINFORCED CONCRETE PIPE UNLESS SPECIFIED OTHERWISE. ALL PIPE 24" IN DIAMETER OR LESS SHALL BE BELL AND SPIGOT TYPE.
27. UNLESS OTHERWISE STATED, ALL WATER WORKS SHALL MEET THE MINIMUM REQUIREMENTS OF THE MOST RECENT EDITION OF THE "UNIFORM STATE PLUMBING CODE." CONTRACTOR SHALL NOTIFY DESIGN ENGINEER OF ANY SUCH CONFLICTS IMMEDIATELY.
28. **SIDEWALK RAMPS SHALL BE INSTALLED ACCORDING TO THE RULES AND REGULATIONS OF THE ARCHITECTURAL BARRIERS BOARD, COMMONWEALTH OF MASSACHUSETTS DEPARTMENT OF PUBLIC SAFETY.**
29. STRUCTURE DETAILS FROM INDEPENDENT VENDORS ARE CONSTANTLY CHANGING. PRIOR TO CONSTRUCTION, THE CONTRACTOR SHALL VERIFY THAT DETAILS SHOWN MATCH CURRENT DETAILS AND SPECIFICATIONS FROM VENDORS.
30. A SUFFICIENT NUMBER OF FIRE ALARM TELEGRAPH BOXES SHALL BE INSTALLED BY THE CONTRACTOR. THE TYPE, NUMBER AND LOCATION TO BE DETERMINED IN WRITING BY THE CHIEF OF THE FIRE DEPARTMENT.
31. SOIL CONDITIONS HAVE BEEN EVALUATED AND DETERMINED TO BE SUITABLE FOR ROAD CONSTRUCTION.
32. ALL UNITS SHALL BE SERVED BY A SUBSURFACE SEWAGE DISPOSAL SYSTEM APPROVED BY THE WENHAM BOARD OF HEALTH.
33. ELECTRIC SYSTEM SHALL BE DESIGNED BY WENHAM ELECTRIC DEPARTMENT ONCE THE SUBDIVISION IS APPROVED.
34. THE SIGHT DISTANCE ALONG MAIN STREET EXCEEDS 500' IN BOTH DIRECTIONS.
35. ALL WATER MAINS, WATER SERVICES AND APPURTENANCES SHALL BE INSTALLED IN ACCORDANCE WITH THE WENHAM WATER DEPARTMENT'S "STANDARD SPECIFICATIONS FOR WATER MAIN EXTENSIONS"' DATED DECEMBER 8, 2004.
36. EACH "UNIT" SHALL HAVE A SEPARATE WATER MAIN CONNECTION, CURB STOP AND METER.
37. ALL WATER LINES SHALL BE A MINIMUM OF EIGHTEEN INCHES OF VERTICAL SEPARATION ABOVE SEWER LINES AT ALL AREAS WHERE WATER AND SEWER CROSS. THERE SHALL BE A MINIMUM OF TEN FEET HORIZONTAL SEPARATION BETWEEN WATER AND SEWER LINES IN ALL AREAS.
38. ALL LANDSCAPE IRRIGATION SHALL BE PROVIDED BY A SEPARATE, PRIVATE WELL ONSITE. ALL LANDSCAPING SHALL BE INSTALLED AND MAINTAINED IN STRICT ACCORDANCE WITH MASSACHUSETTS WATER RESOURCES COMMISSION'S "GUIDE TO LAWN AND LANDSCAPE WATER CONSERVATION", MAY 2002
39. SILT FENCE AND/OR HAY BALES SHOWN HEREON SHALL BE INSTALLED BEFORE EARTH DISTURBANCE OCCURS WITHIN THE BUFFER ZONE, AND SHALL SERVE AS THE LIMIT OF WORK.
40. CONTRACTOR SHALL PROVIDE DUST CONTROL FOR CONSTRUCTION OPERATIONS AS APPROVED BY THE ENGINEER.
41. ALL POINTS OF CONSTRUCTION EGRESS OR INGRESS SHALL BE MAINTAINED TO PREVENT TRACKING OR FLOWING OF SEDIMENT ONTO PUBLIC ROADS
42. EACH OF THE NEWLY PROPOSED TOWNHOUSE UNITS WILL HAVE AN AREA THAT IS LARGE ENOUGH TO ACCOMMODATE 6 CARS, I.E. 2 IN THE GARAGE AND 4 IN THE DRIVEWAY

LEGEND

EXISTING		PROPOSED
12"RCP	DRAINLINE WITH PIPE SIZE, MATERIAL & FLOW DIRECTION, CATCH BASIN MANHOLE & FLARED END	SD DMH
W	WATER MAIN AND VALVE	W
G	NATURAL GAS LINE AND VALVE	G
	PROPERTY LINE	
	EASEMENT LINE	
55.36' N120°46'23"E	BEARING & DISTANCE ALONG BOUNDARY	55.36' N120°46'23"E
<< 249.56' >>	TOTALED BOUNDARY FRONTAGE	<< 249.56' >>
#2	ELEVATION BENCH MARK	
	STONE WALL	
	RETAINING WALL	
	WOOD FENCE	
	EDGE OF GRAVEL OR DIRT ROAD	
	EDGE OF PAVEMENT	
	CURB	93.3 F.G.
× 92.6	SPOT ELEVATION	92
92	ELEVATION CONTOUR	
WFA9	LIMIT OF BORDERING VEGETATED WETLAND (WITH FLAG NUMBER)	
	LIMIT OF 100-FOOT WETLAND BUFFER ZONE	
	EDGE OF WOODS OR BRUSH (DRIP LINE)	
HYD	FIRE HYDRANT	HYD
12"M	PROMINENT DECIDUOUS TREE WITH SIZE AND SPECIES	12"M
18"P	PROMINENT CONIFEROUS TREE WITH SIZE AND SPECIES	18"P
	SILT FENCE	
TP TP-1 95.2	TEST PIT WITH ELEVATION	
PT6	PERCOLATION TEST	
	GUARDRAIL	
	TO BE REMOVED	(TBR)
	STORMWATER ROOF INFILTRATION	

OPERATION AND MAINTENANCE (O & M) PLAN:

AS REQUIRED, THE O & M PLAN TYPICALLY HAS PROCEDURES TO MINIMIZE STORMWATER POLLUTION FROM HIGH IMPACT ACTIVITY AND INCLUDES THE FOLLOWING:

1. PROVIDE GOOD HOUSE KEEPING PROCEDURES IN AND AROUND THE PROPOSED DRAINS, THE EXISTING WETLAND AREAS AND THE PROPOSED DETENTION BASINS.

2. DO A VISUAL INSPECTION PERIODICALLY AT EACH OF THESE STORMWATER COLLECTION POINTS.

3. MOST CATCH BASINS HAVE A STORAGE AREA AT THE BOTTOM TO TRAP SEDIMENT AND DEBRIS. ONCE THE BASIN IS HALF FULL OF SEDIMENT IT MUST BE CLEANED AND THE SEDIMENT REMOVED FROM THE STRUCTURE EITHER BY VACUUM EQUIPMENT OR MANUAL LABOR.

PROJECT NAME:

WENHAM PINES

56 & 60 Main Street
Wenham, MA 01984

APPLICANT:

WENHAM PINES LLC.

6 Kimball Lane
Lynnfield, MA 01940

OWNER:

ESTATE OF WILLIAM J. FLYNN

5 Barker Road
Boxford, MA 01921

HANCOCK ASSOCIATES

Civil Engineers

Land Surveyors

Wetland Scientists

185 CENTRE STREET, DANVERS, MA 01923
VOICE (978) 777-3050, FAX (978) 774-7816
WWW.HANCOCKASSOCIATES.COM

COMMONWEALTH OF MASSACHUSETTS — TALACKO — CIVIL — No. 34026 — REGISTERED PROFESSIONAL ENGINEER — 7/20/16

NO.	BY	APP	DATE	ISSUE/REVISION DESCRIPTION

DATE: 7/19/2016		DESIGN BY:	RAT
SCALE: AS SHOWN		DRAWN BY:	RD
APPRVD. BY: VVT		CHECK BY:	RAT

NOTES, REFERENCES, AND LEGEND

PLOT DATE: Jul 20, 2016 10:18 am
PATH: F:\Civil 3D Projects\19400\DWG\

DWG: 19400C1 160708.dwg

LAYOUT: NOTES

SHEET: 2 OF 34

PROJECT NO.: 19400

ASSESSORS:

MAP 27, LOTS 36 & 44

REFERENCES:

DEED BOOK 5892, PAGE 439
DEED BOOK 5892, PAGE 444
DEED BOOK 5892, PAGE 445
DEED BOOK 5982, PAGE 446
PLAN BOOK 139, PLAN 79
PLAN BOOK 123, PLAN 28
PLAN BOOK 141, PLAN 20
PLAN BOOK 1457, PLAN 201
PLAN BOOK 1352, PLAN 363
PLAN BOOK 820, PLAN 16
PLAN BOOK 375, PLAN 13
PLAN BOOK 376, PLAN 44
PLAN BOOK 376, PLAN 45
PLAN BOOK 1980, PLAN 16
1897 STATE HIGHWAY LAYOUT (LAYOUT NO. 232)
1932 STATE HIGHWAY LAYOUT ALTERATION (LAYOUT NO. 2950)
PLAN ENTITLED "TOPOGRAPHIC SITE PLAN, LAKEVIEW GOLF CLUB, 56 & 60 MAIN STREET, WENHAM, MA," BY DONOHOE AND PARKHURST, INC., AND DATED AUGUST 4, 2008.

RECORD OWNER:

WILLIAM J. FLYNN

LEGEND

234	SURFACE CONTOUR
	STONE WALL
	METAL GUARDRAIL
	EDGE OF PAVEMENT
	CHAIN LINK FENCE
	WOOD FENCE
26.75 / 26.25	CURB WITH TOP AND BOTTOM CURB ELEVATION
	EDGE OF WOODED AREA
W 6"CI	WATER MANHOLE, WATER MAIN WITH SIZE, TEE, GATE VALVE & FIRE HYDRANT
GV 10"DI	GAS MAIN WITH SIZE & GATE VALVE
#181 OHW	EXISTING UTILITY POLE WITH DESIGNATION OVERHEAD WIRES AND GUY POLE
	RETAINING WALL
	STONE RETAINING WALL
	HEDGE LINE
208.8 WFA2	LIMIT OF BORDERING VEGETATED WETLAND WITH FLAG NUMBER AND ELEVATION
	LIMIT OF 100-FOOT WETLAND BUFFER ZONE
	LIMIT OF 200-FOOT RIVER FRONT BUFFER ZONE
	LIMIT OF 400-FOOT "ZONE A" FROM 310 CMR 22.00
	LIMIT OF 100-YEAR FLOOD PLAIN
	EDGE OF GRAVEL ROAD
	OBSERVED HIGH WATER
	EDGE OF WATER

× 232.6	SPOT ELEVATION
12"M	PROMINENT DECIDUOUS TREE
18"P	PROMINENT CONIFEROUS TREE
	LIGHT POLE
	TYPICAL SHRUB
M 205.24	MONITORING WELL WITH TOP METAL CASING EL.
RCP	REINFORCED CONCRETE PIPE
CI	CAST IRON
CMP	CORRUGATED METAL PIPE
ASB.	ASBESTOS PIPE
VC	VITRIFIED CLAY
PVC	POLYVINYL CHLORIDE
SMH	SEWER MANHOLE
DMH	DRAIN MANHOLE
CB	CATCH BASIN
	BOLLARD
	SIGN
W	MANHOLE (UNKNOWN UTILITY)
(2L)	TWO LIMBED
(R)	RECORD
(C)	CALCULATED
(R/H)	RECORD AND HELD
(M)	FIELD MEASURED
DH	DRILL HOLE
DHCB	DRILL HOLE IN CONCRETE BOUND
DHSB	DRILL HOLE IN STONE BOUND
I.PIPE	IRON PIPE
SB	STONE BOUND
I.ROD	IRON ROD
MHB	MASS HIGHWAY BOUND
EPLP	ESCUTCHEON PIN IN A LEAD PLUG
ECSB	ESSEX COUNTY STONE BOUND
CTR. BK.	CENTER BACK

TREE ABBREVIATIONS

M	MAPLE
O	OAK
P	PINE
C	CEDAR
LIN	LINDEN
CH	CHERRY
E	ELM
S	SPRUCE
HIC	HICKORY
SYC	SYCAMORE

NOTES:

1) UNDERGROUND UTILITIES ARE SHOWN HEREON FROM FIELD LOCATIONS OF SURFACE VISIBLE STRUCTURES AND FROM AVAILABLE RECORD INFORMATION AND PRIVATE UTILITY COMPANIES. OTHER UNDERGROUND UTILITIES MAY EXIST. IT SHALL BE THE RESPONSIBILITY OF THE CONTRACTOR TO VERIFY THE LOCATION, SIZE & ELEVATION OF ALL UTILITIES WITHIN THE AREA OF PROPOSED WORK AND TO CONTACT "DIG-SAFE" AT 811 AT LEAST 72 HOURS PRIOR TO ANY EXCAVATION, DEMOLITION OR CONSTRUCTION.

2) THE ELEVATIONS SHOWN HERON ARE REFERENCED TO THE NATIONAL GEODETIC VERTICAL DATUM OF 1929 (NGVD29).

3) THIS PLAN IS PREPARED FROM INFORMATION PROVIDED BY DONOHOE AND PARKHURST, INC. AND VERIFIED AND SUPPLEMENTED VIA FIELD SURVEY PERFORMED BY HANCOCK ASSOCIATES.

4) 36" WATER MAIN SHOWN HEREON FROM PLAN BOOK 136, PLAN 79.

5) LOCATION OF WENHAM LAKE SHOWN HEREON FROM PLAN ENTITLED "SALEM-BEVERLY WATER SUPPLY BOARD, NO. 5, ANNOTATED BY T. KNOWLTON, P.E".

6) THE LOCATION OF THE 400 FOOT ZONE A FROM THE BANK OF THE WENHAM LAKE RESERVOIR AS DEPICTED ON THIS PLAN IS DETERMINED BY FIELD SURVEY. THE LOCATION WAS DETERMINED FROM OBSERVED TOP OF DAM ELEVATION OF 34.65' (NGVD29) AND TOPOGRAPHY AT RESERVOIRS BANK.

7) TEMPORARY BENCH MARKS TO BE ESTABLISHED PRIOR TO THE START OF CONSTRUCTION

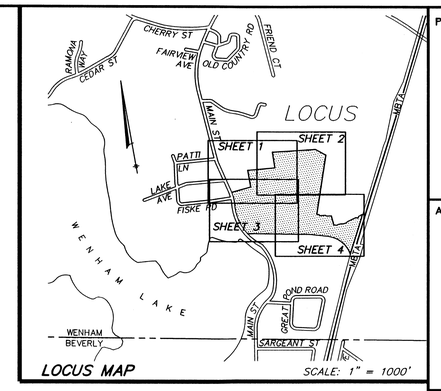

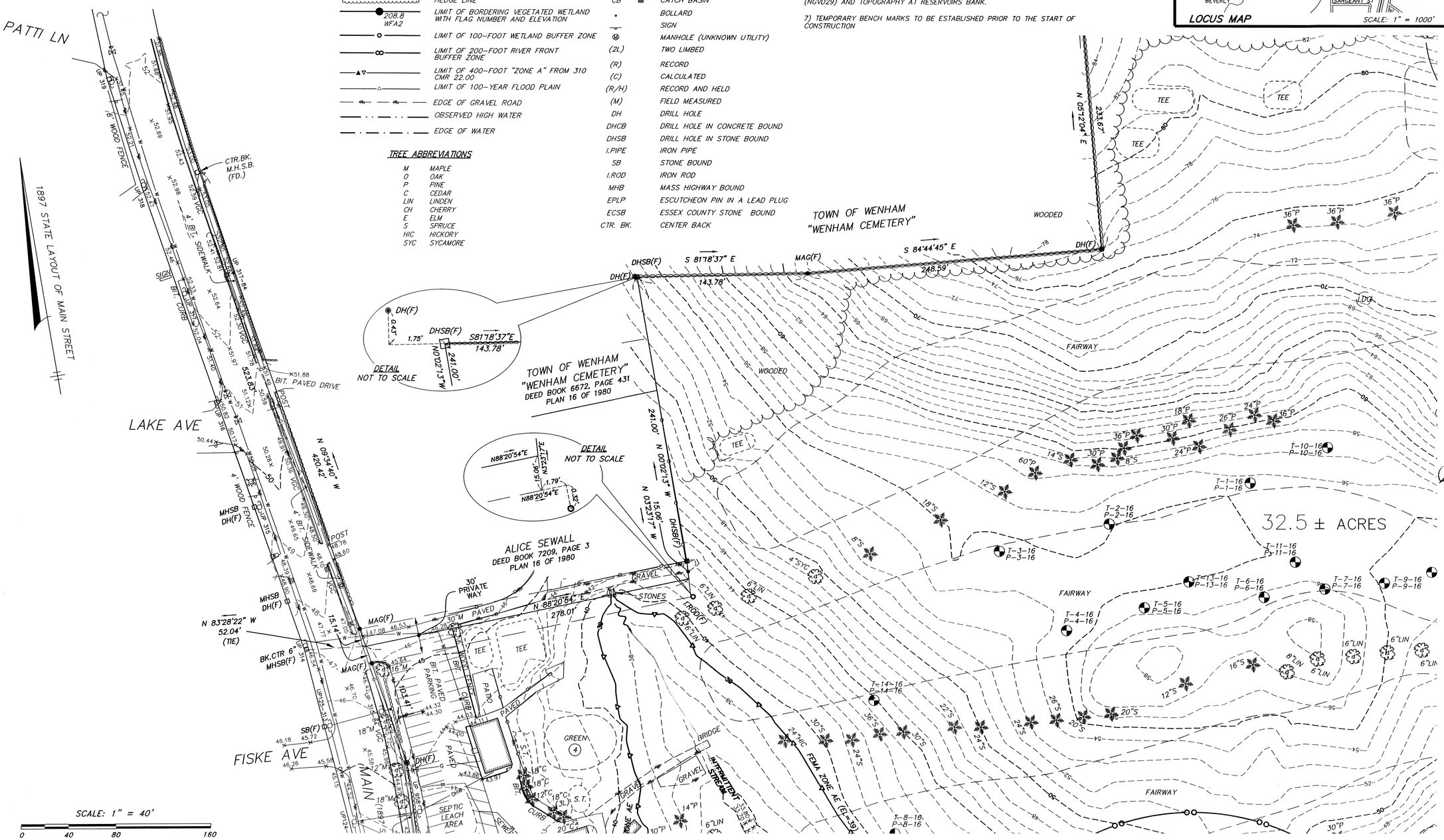

PROJECT NAME:

WENHAM PINES

56 & 60 Main Street
Wenham, MA 01984

APPLICANT:

WENHAM PINES LLC.

6 Kimball Lane
Lynnfield, MA 01940

OWNER:

ESTATE OF WILLIAM J. FLYNN

5 Barker Road
Boxford, MA 01921

HANCOCK ASSOCIATES

Civil Engineers

Land Surveyors

Wetland Scientists

185 CENTRE STREET, DANVERS, MA 01923
VOICE (978) 777-3050, FAX (978) 774-7816
WWW.HANCOCKASSOCIATES.COM

COMMONWEALTH OF MASSACHUSETTS
GREGORY G. GOULD
No. 51290
PROFESSIONAL LAND SURVEYOR
7/20/16

NO.	BY	APP	DATE	ISSUE/REVISION DESCRIPTION

DATE:	7/19/2016	DESIGN BY:	
SCALE:	1" = 40'	DRAWN BY:	NCO
APPRVD. BY:		CHECK BY:	GGG

EXISTING CONDITIONS

PLOT DATE: Jul 20, 2016 10:40 am
PATH: U:\s2_wtl\Civil 3D Projects\19400\DWG\

DWG: 19400ec(1).dwg
LAYOUT: EC
SHEET: 3 OF 34

EC-1

PROJECT NO.: 19400

NOTE:

1) FOR LEGEND, NOTES & REFERENCES, SEE SHEET 1 OF 4.

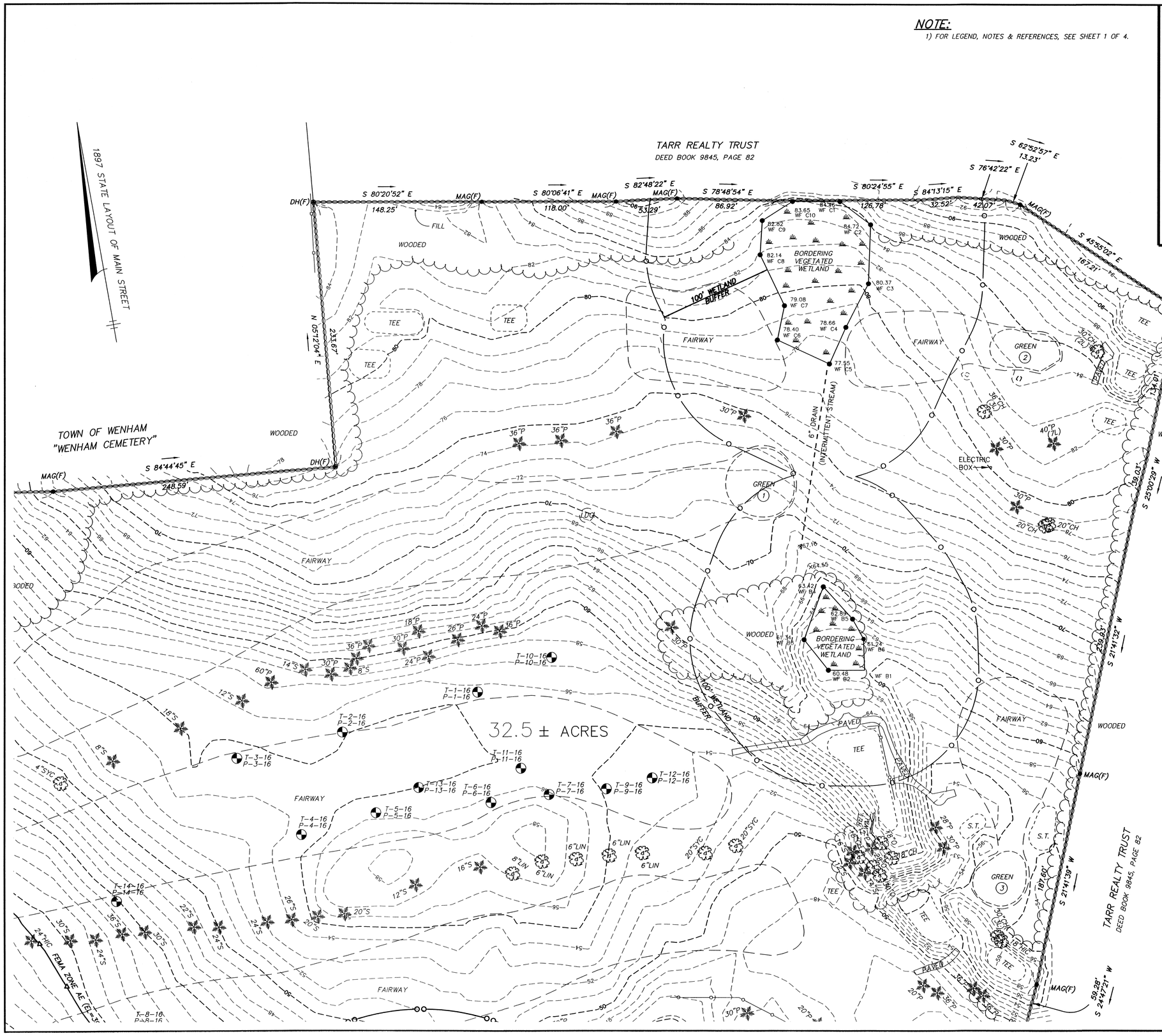

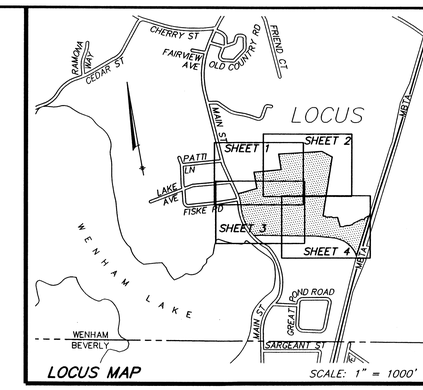

PROJECT NAME:

WENHAM PINES

56 & 60 Main Street
Wenham, MA 01984

APPLICANT:

WENHAM PINES LLC.

6 Kimball Lane
Lynnfield, MA 01940

OWNER:

ESTATE OF WILLIAM J. FLYNN

5 Barker Road
Boxford, MA 01921

HANCOCK ASSOCIATES

Civil Engineers

Land Surveyors

Wetland Scientists

185 CENTRE STREET, DANVERS, MA 01923
VOICE (978) 777-3050, FAX (978) 774-7816
WWW.HANCOCKASSOCIATES.COM

COMMONWEALTH OF MASSACHUSETTS
GREGORY G. GOULD
No. 51200
PROFESSIONAL LAND SURVEYOR

7/20/16

NO.	BY	APP	DATE	ISSUE/REVISION DESCRIPTION

DATE:	7/19/2016	DESIGN BY:	
SCALE:	1" = 40'	DRAWN BY:	NCO
APPRVD. BY:		CHECK BY:	GGG

EXISTING CONDITIONS

PLOT DATE: Jul 20, 2016 10:39 am
PATH: U:\x2_vol1\Civil 3D Projects\19400\DWG\

DWG:	19400ec(1).dwg
LAYOUT:	EC
SHEET:	4 OF 34
PROJECT NO.:	19400

EC-2

NOTE:

1) FOR LEGEND, NOTES & REFERENCES, SEE SHEET 1 OF 4.

PROJECT NAME:

WENHAM PINES

56 & 60 Main Street
Wenham, MA 01984

APPLICANT:

WENHAM PINES LLC.

6 Kimball Lane
Lynnfield, MA 01940

OWNER:

ESTATE OF WILLIAM J. FLYNN

5 Barker Road
Boxford, MA 01921

HANCOCK ASSOCIATES

Civil Engineers

Land Surveyors

Wetland Scientists

185 CENTRE STREET, DANVERS, MA 01923
VOICE (978) 777-3050, FAX (978) 774-7816
WWW.HANCOCKASSOCIATES.COM

COMMONWEALTH OF MASSACHUSETTS
GREGORY G. GOULD
No. 51280
PROFESSIONAL LAND SURVEYOR

7/20/16

NO.	BY	APP	DATE	ISSUE/REVISION DESCRIPTION

DATE:	7/19/2016	DESIGN BY:	
SCALE:	1" = 40'	DRAWN BY:	NCO
APPRVD. BY:		CHECK BY:	GGG

EXISTING CONDITIONS

PLOT DATE: Jul 20, 2016 10:37 am
PATH: U:\x2_vol1\CIVil 3D Projects\19400\DWG\

DWG: 19400ec(1).dwg	EC-3
LAYOUT: EC	
SHEET: 5 OF 34	
PROJECT NO.:	19400

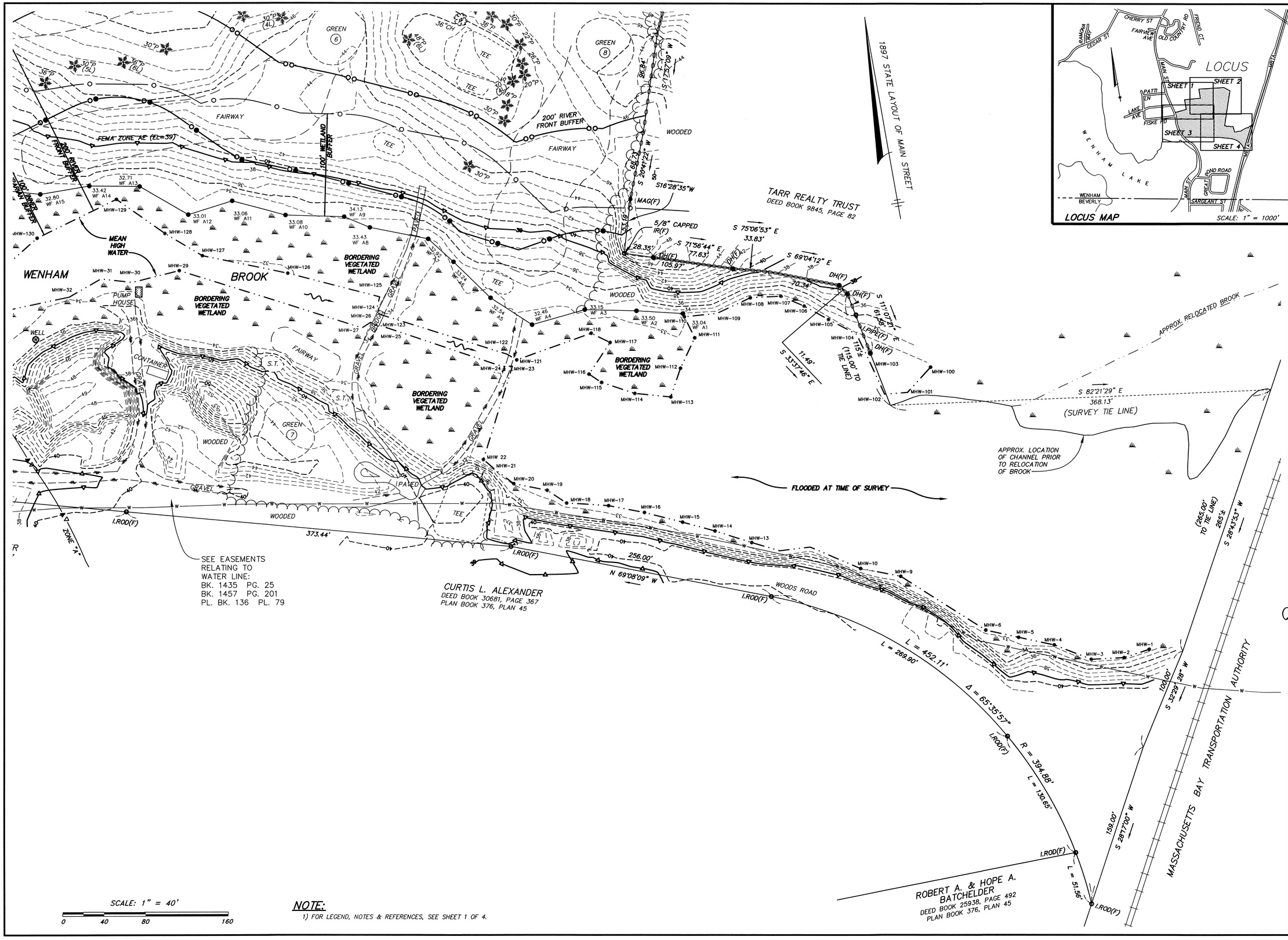

NOTE:

1) FOR LEGEND, NOTES & REFERENCES, SEE SHEET 1 OF 4.

PROJECT NAME:

WENHAM PINES

56 & 60 Main Street
Wenham, MA 01984

APPLICANT:

WENHAM PINES LLC.

6 Kimball Lane
Lynnfield, MA 01940

OWNER:

ESTATE OF WILLIAM J. FLYNN

5 Barker Road
Boxford, MA 01921

HANCOCK ASSOCIATES

Civil Engineers

Land Surveyors

Wetland Scientists

185 CENTRE STREET, DANVERS, MA 01923
VOICE (978) 777-3050, FAX (978) 774-7816
WWW.HANCOCKASSOCIATES.COM

COMMONWEALTH OF MASSACHUSETTS
GREGORY G. GOULD
No. 51280
PROFESSIONAL LAND SURVEYOR
7/20/16

NO.	BY	APP	DATE	ISSUE/REVISION DESCRIPTION

DATE:	7/19/2016	DESIGN BY:	
SCALE:	1" = 40'	DRAWN BY:	NCO
APPRVD. BY:		CHECK BY:	GGG

EXISTING CONDITIONS

PLOT DATE: Jul 20, 2016 10:36 am
PATH: U:\s2_vol1\Civil 3D Projects\19400\DWG\

DWG:	19400ec(1).dwg
LAYOUT:	EC
SHEET:	6 OF 34
PROJECT NO.:	19400

EC-4

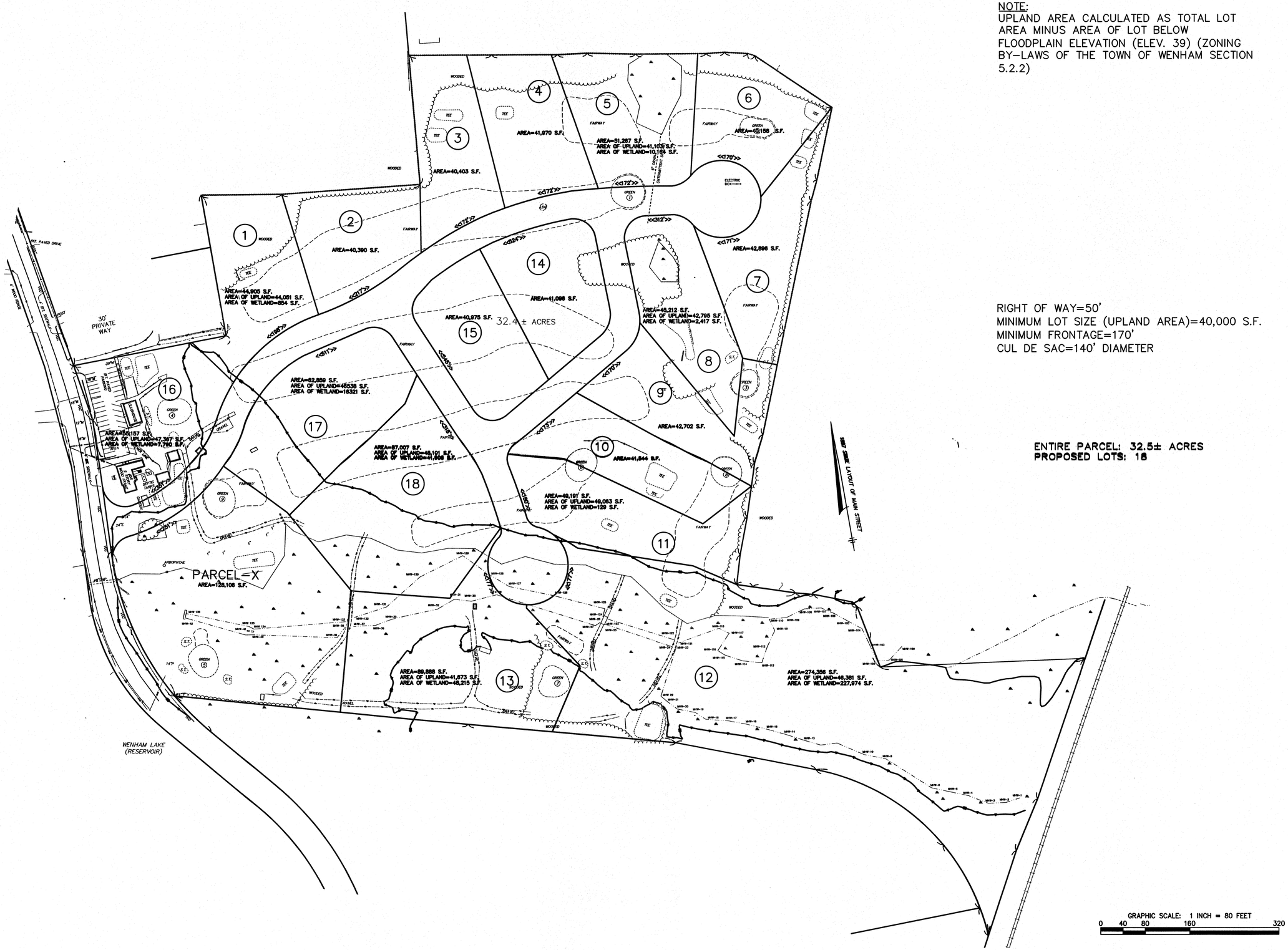

NOTE:
UPLAND AREA CALCULATED AS TOTAL LOT AREA MINUS AREA OF LOT BELOW FLOODPLAIN ELEVATION (ELEV. 39) (ZONING BY-LAWS OF THE TOWN OF WENHAM SECTION 5.2.2)

RIGHT OF WAY=50'
MINIMUM LOT SIZE (UPLAND AREA)=40,000 S.F.
MINIMUM FRONTAGE=170'
CUL DE SAC=140' DIAMETER

ENTIRE PARCEL: 32.5± ACRES
PROPOSED LOTS: 18

PROJECT NAME:

WENHAM PINES

56 & 60 Main Street
Wenham, MA 01984

APPLICANT:

WENHAM PINES LLC.

6 Kimball Lane
Lynnfield, MA 01940

OWNER:

ESTATE OF WILLIAM J. FLYNN

56 & 60 Main Street
Wenham, MA 01984

HANCOCK ASSOCIATES

Civil Engineers

Land Surveyors

Wetland Scientists

185 CENTRE STREET, DANVERS, MA 01923
VOICE (978) 777-3050, FAX (978) 774-7816
WWW.HANCOCKASSOCIATES.COM

COMMONWEALTH OF MASSACHUSETTS
TALASCIO
CIVIL
No. 34026
REGISTERED PROFESSIONAL ENGINEER
7/20/16

NO.	BY	APP	DATE	ISSUE/REVISION DESCRIPTION
3	TRD	RAT	7/8/16	LOT MODIFICATION
2	TRD	RAT	5/26/16	LOT MODIFICATION
1	JPC	RAT	3/14/16	PER PB COMMENTS

YIELD PLAN

PLOT DATE: Jul 20, 2016 10:05 am
PATH: F:\Civil 3D Projects\19400\DWG\

DWG: 19400 C2 YIELD PLAN 160708.dwg
LAYOUT: YIELD PLAN
SHEET: 7 OF 34

C-1

PROJECT NO.: 19400

PROJECT NAME:

WENHAM PINES

56 & 60 Main Street
Wenham, MA 01984

APPLICANT:

WENHAM PINES LLC.

6 Kimball Lane
Lynnfield, MA 01940

OWNER:

ESTATE OF WILLIAM J. FLYNN

5 Barker Road
Boxford, MA 01921

HANCOCK ASSOCIATES

Civil Engineers

Land Surveyors

Wetland Scientists

185 CENTRE STREET, DANVERS, MA 01923
VOICE (978) 777-3050, FAX (978) 774-7816
WWW.HANCOCKASSOCIATES.COM

COMMONWEALTH OF MASSACHUSETTS
TALACKO
CIVIL
No. 34026
REGISTERED PROFESSIONAL ENGINEER
7/20/16

NO.	BY	APP	DATE	ISSUE/REVISION DESCRIPTION

DATE:	7/19/2016	DESIGN BY:	RAT
SCALE:	AS SHOWN	DRAWN BY:	JPC
APPRVD. BY:	VVT	CHECK BY:	RAT

MASTER PLAN

PLOT DATE: Jul 20, 2016 10:19 am
PATH: F:\Civil 3D Projects\19400\DWG\

DWG: 19400C1 16070B.dwg
LAYOUT: MP
SHEET: 8 OF 34

MP

PROJECT NO.: 19400

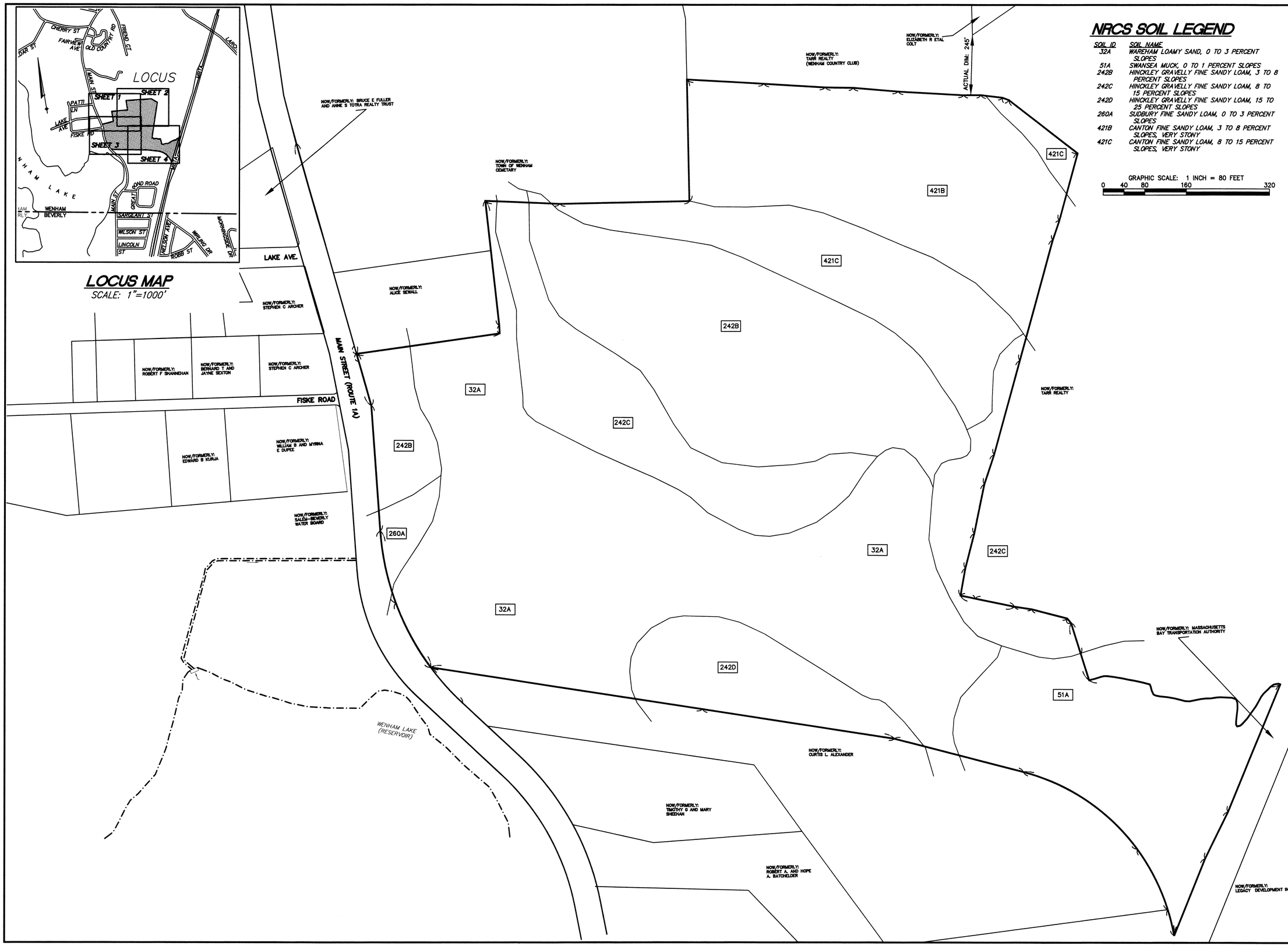

NRCS SOIL LEGEND

SOIL ID	SOIL NAME
32A	WAREHAM LOAMY SAND, 0 TO 3 PERCENT SLOPES
51A	SWANSEA MUCK, 0 TO 1 PERCENT SLOPES
242B	HINCKLEY GRAVELLY FINE SANDY LOAM, 3 TO 8 PERCENT SLOPES
242C	HINCKLEY GRAVELLY FINE SANDY LOAM, 8 TO 15 PERCENT SLOPES
242D	HINCKLEY GRAVELLY FINE SANDY LOAM, 15 TO 25 PERCENT SLOPES
260A	SUDBURY FINE SANDY LOAM, 0 TO 3 PERCENT SLOPES
421B	CANTON FINE SANDY LOAM, 3 TO 8 PERCENT SLOPES, VERY STONY
421C	CANTON FINE SANDY LOAM, 8 TO 15 PERCENT SLOPES, VERY STONY

GRAPHIC SCALE: 1 INCH = 80 FEET
0 40 80 160 320

PROJECT NAME:

WENHAM PINES

56 & 60 Main Street
Wenham, MA 01984

APPLICANT:

WENHAM PINES LLC.

6 Kimball Lane
Lynnfield, MA 01940

OWNER:

ESTATE OF WILLIAM J. FLYNN

5 Barker Road
Boxford, MA 01921

HANCOCK ASSOCIATES

Civil Engineers

Land Surveyors

Wetland Scientists

185 CENTRE STREET, DANVERS, MA 01923
VOICE (978) 777-3050, FAX (978) 774-7816
WWW.HANCOCKASSOCIATES.COM

COMMONWEALTH OF MASSACHUSETTS
RICHARD A. TALBOT
CIVIL
No. 34026
REGISTERED PROFESSIONAL ENGINEER
7/20/16

NO.	BY	APP	DATE	ISSUE/REVISION DESCRIPTION

DATE:	7/19/2016	DESIGN BY:	RAT
SCALE:	AS SHOWN	DRAWN BY:	JPC
APPRVD. BY:	VVT	CHECK BY:	RAT

SOILS AND ABUTTERS MAP

PLOT DATE: Jul 20, 2016 10:52 am
PATH: F:\Civil 3D Projects\19400\DWG\

DWG: 19400C1 16070B.dwg

LAYOUT: SOILS

SHEET: 9 OF 34

S/A

PROJECT NO.: 19400

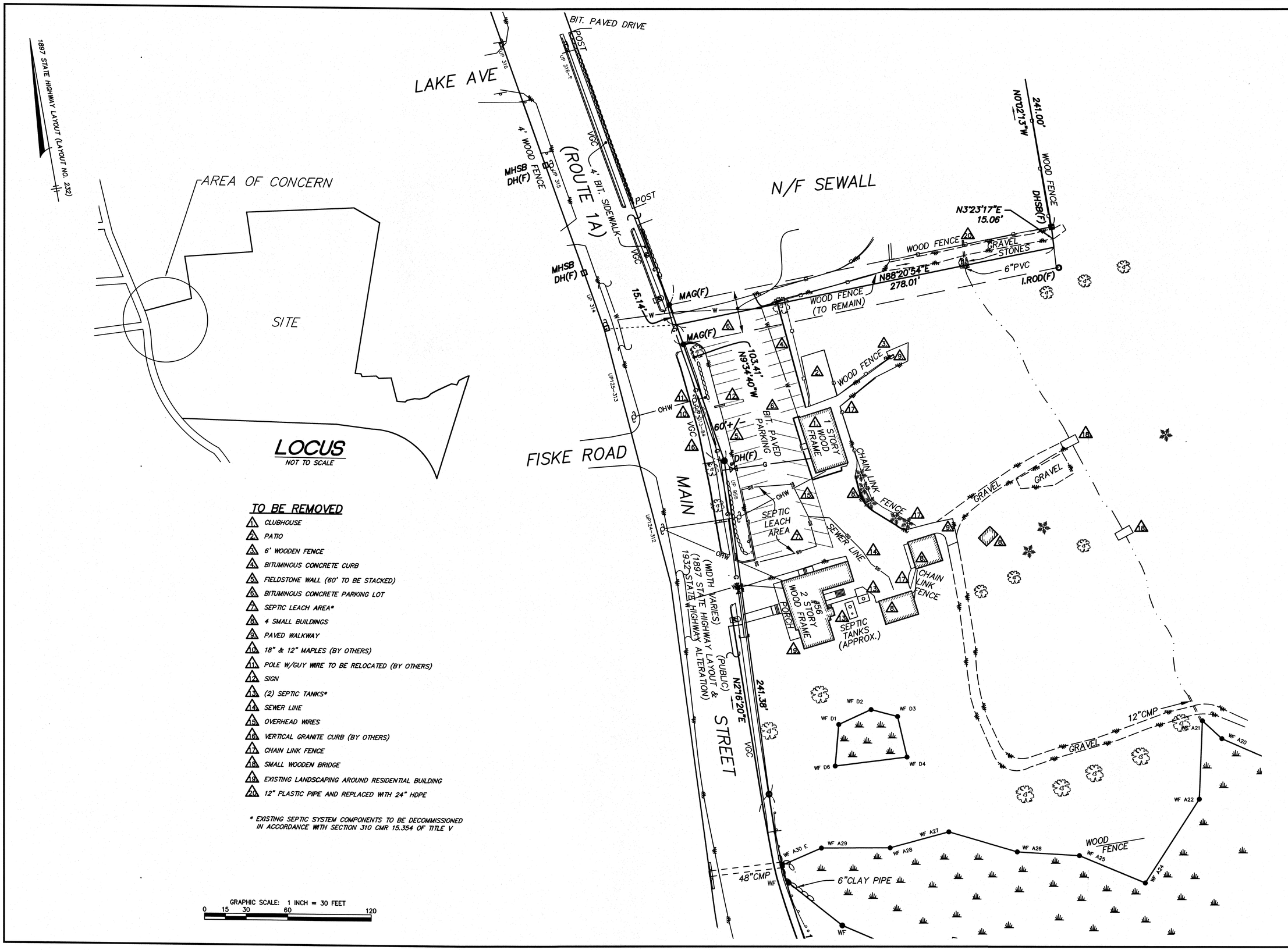

TO BE REMOVED

1. CLUBHOUSE
2. PATIO
3. 6' WOODEN FENCE
4. BITUMINOUS CONCRETE CURB
5. FIELDSTONE WALL (60' TO BE STACKED)
6. BITUMINOUS CONCRETE PARKING LOT
7. SEPTIC LEACH AREA*
8. 4 SMALL BUILDINGS
9. PAVED WALKWAY
10. 18" & 12" MAPLES (BY OTHERS)
11. POLE W/GUY WIRE TO BE RELOCATED (BY OTHERS)
12. SIGN
13. (2) SEPTIC TANKS*
14. SEWER LINE
15. OVERHEAD WIRES
16. VERTICAL GRANITE CURB (BY OTHERS)
17. CHAIN LINK FENCE
18. SMALL WOODEN BRIDGE
19. EXISTING LANDSCAPING AROUND RESIDENTIAL BUILDING
20. 12" PLASTIC PIPE AND REPLACED WITH 24" HDPE

* EXISTING SEPTIC SYSTEM COMPONENTS TO BE DECOMMISSIONED IN ACCORDANCE WITH SECTION 310 CMR 15.354 OF TITLE V

PROJECT NAME:

WENHAM PINES

56 & 60 Main Street
Wenham, MA 01984

APPLICANT:

WENHAM PINES LLC.

6 Kimball Lane
Lynnfield, MA 01940

OWNER:

ESTATE OF WILLIAM J. FLYNN

5 Barker Road
Boxford, MA 01921

HANCOCK ASSOCIATES

Civil Engineers

Land Surveyors

Wetland Scientists

185 CENTRE STREET, DANVERS, MA 01923
VOICE (978) 777-3050, FAX (978) 774-7816
WWW.HANCOCKASSOCIATES.COM

COMMONWEALTH OF MASSACHUSETTS
TALACKO
CIVIL
No. 34026
REGISTERED PROFESSIONAL ENGINEER
7/20/16

NO.	BY	APP	DATE	ISSUE/REVISION DESCRIPTION

DATE:	7/19/2016	DESIGN BY:	RAT
SCALE:	1"=80'	DRAWN BY:	JPC
APPRVD. BY:	VVT	CHECK BY:	RAT

DEMOLITION PLAN

PLOT DATE: Jul 20, 2016 10:12 am
PATH: F:\Civil 3D Projects\19400\DWG\

DWG: 19400 demo.dwg
LAYOUT: DEMO
SHEET: 10 OF 34

D-1

PROJECT NO.: 19400

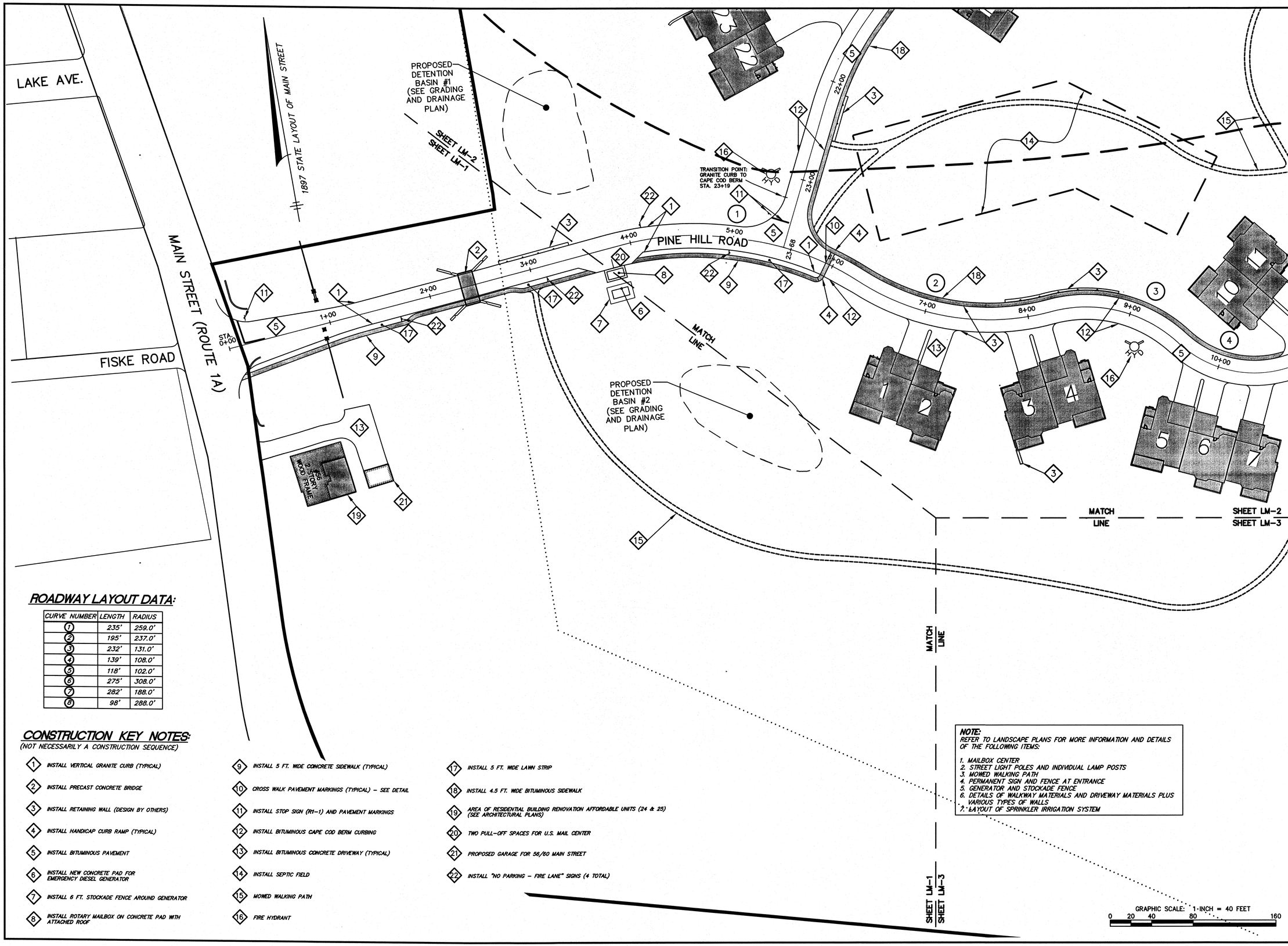

ROADWAY LAYOUT DATA:

CURVE NUMBER	LENGTH	RADIUS
1	235'	259.0'
2	195'	237.0'
3	232'	131.0'
4	139'	108.0'
5	118'	102.0'
6	275'	308.0'
7	282'	188.0'
8	98'	288.0'

CONSTRUCTION KEY NOTES:

(NOT NECESSARILY A CONSTRUCTION SEQUENCE)

1. INSTALL VERTICAL GRANITE CURB (TYPICAL)
2. INSTALL PRECAST CONCRETE BRIDGE
3. INSTALL RETAINING WALL (DESIGN BY OTHERS)
4. INSTALL HANDICAP CURB RAMP (TYPICAL)
5. INSTALL BITUMINOUS PAVEMENT
6. INSTALL NEW CONCRETE PAD FOR EMERGENCY DIESEL GENERATOR
7. INSTALL 6 FT. STOCKADE FENCE AROUND GENERATOR
8. INSTALL ROTARY MAILBOX ON CONCRETE PAD WITH ATTACHED ROOF
9. INSTALL 5 FT. WIDE CONCRETE SIDEWALK (TYPICAL)
10. CROSS WALK PAVEMENT MARKINGS (TYPICAL) – SEE DETAIL
11. INSTALL STOP SIGN (R1-1) AND PAVEMENT MARKINGS
12. INSTALL BITUMINOUS CAPE COD BERM CURBING
13. INSTALL BITUMINOUS CONCRETE DRIVEWAY (TYPICAL)
14. INSTALL SEPTIC FIELD
15. MOWED WALKING PATH
16. FIRE HYDRANT
17. INSTALL 5 FT. WIDE LAWN STRIP
18. INSTALL 4.5 FT. WIDE BITUMINOUS SIDEWALK
19. AREA OF RESIDENTIAL BUILDING RENOVATION AFFORDABLE UNITS (24 & 25) (SEE ARCHITECTURAL PLANS)
20. TWO PULL-OFF SPACES FOR U.S. MAIL CENTER
21. PROPOSED GARAGE FOR 56/60 MAIN STREET
22. INSTALL "NO PARKING – FIRE LANE" SIGNS (4 TOTAL)

NOTE:
REFER TO LANDSCAPE PLANS FOR MORE INFORMATION AND DETAILS OF THE FOLLOWING ITEMS:

1. MAILBOX CENTER
2. STREET LIGHT POLES AND INDIVIDUAL LAMP POSTS
3. MOWED WALKING PATH
4. PERMANENT SIGN AND FENCE AT ENTRANCE
5. GENERATOR AND STOCKADE FENCE
6. DETAILS OF WALKWAY MATERIALS AND DRIVEWAY MATERIALS PLUS VARIOUS TYPES OF WALLS
7. LAYOUT OF SPRINKLER IRRIGATION SYSTEM

PROJECT NAME:
WENHAM PINES
56 & 60 Main Street
Wenham, MA 01984

APPLICANT:
WENHAM PINES LLC.
6 Kimball Lane
Lynnfield, MA 01940

OWNER:
ESTATE OF WILLIAM J. FLYNN
5 Barker Road
Boxford, MA 01921

HANCOCK ASSOCIATES
Civil Engineers
Land Surveyors
Wetland Scientists
185 CENTRE STREET, DANVERS, MA 01923
VOICE (978) 777-3050, FAX (978) 774-7816
WWW.HANCOCKASSOCIATES.COM

COMMONWEALTH OF MASSACHUSETTS
MACLAY W. TALACKO
CIVIL
No. 34026
REGISTERED PROFESSIONAL ENGINEER
7/20/16

NO.	BY	APP	DATE	ISSUE/REVISION DESCRIPTION

DATE:	7/19/2016	DESIGN BY:	RAT
SCALE:	AS SHOWN	DRAWN BY:	JPC
APPRVD. BY:	VVT	CHECK BY:	DID/RAT

LAYOUT AND MATERIALS

PLOT DATE: Jul 20, 2016 10:20 am
PATH: F:\Civil 3D Projects\19400\DWG\

DWG: 19400C1 16070B.dwg
LAYOUT: LM-1
SHEET: 11 OF 34
LM-1
PROJECT NO.: 19400

CONSTRUCTION KEY NOTES:
(NOT NECESSARILY A CONSTRUCTION SEQUENCE)

1. INSTALL VERTICAL GRANITE CURB (TYPICAL)
2. INSTALL PRECAST CONCRETE BRIDGE
3. INSTALL RETAINING WALL (DESIGN BY OTHERS)
4. INSTALL HANDICAP CURB RAMP (TYPICAL)
5. INSTALL BITUMINOUS PAVEMENT
6. INSTALL NEW CONCRETE PAD FOR EMERGENCY DIESEL GENERATOR
7. INSTALL 6 FT. STOCKADE FENCE AROUND GENERATOR
8. INSTALL ROTARY MAILBOX ON CONCRETE PAD WITH ATTACHED ROOF
9. INSTALL 5 FT. WIDE CONCRETE SIDEWALK (TYPICAL)
10. CROSS WALK PAVEMENT MARKINGS (TYPICAL) – SEE DETAIL
11. INSTALL STOP SIGN (R1-1)
12. INSTALL BITUMINOUS CAPE COD BERM CURBING
13. INSTALL BITUMINOUS CONCRETE DRIVEWAY (TYPICAL)
14. INSTALL SEPTIC FIELD
15. MOWED WALKING PATH
16. FIRE HYDRANT
17. INSTALL 5 FT. WIDE LAWN STRIP
18. INSTALL 4.5 FT. WIDE BITUMINOUS SIDEWALK
19. AREA OF RESIDENTIAL BUILDING RENOVATION AFFORDABLE UNITS (24 & 25) (SEE ARCHITECTURAL PLANS)
20. TWO PULL-OFF SPACES FOR U.S. MAIL CENTER
21. PROPOSED GARAGE FOR 56/60 MAIN STREET
22. INSTALL "NO PARKING – FIRE LANE" SIGNS (4 TOTAL)

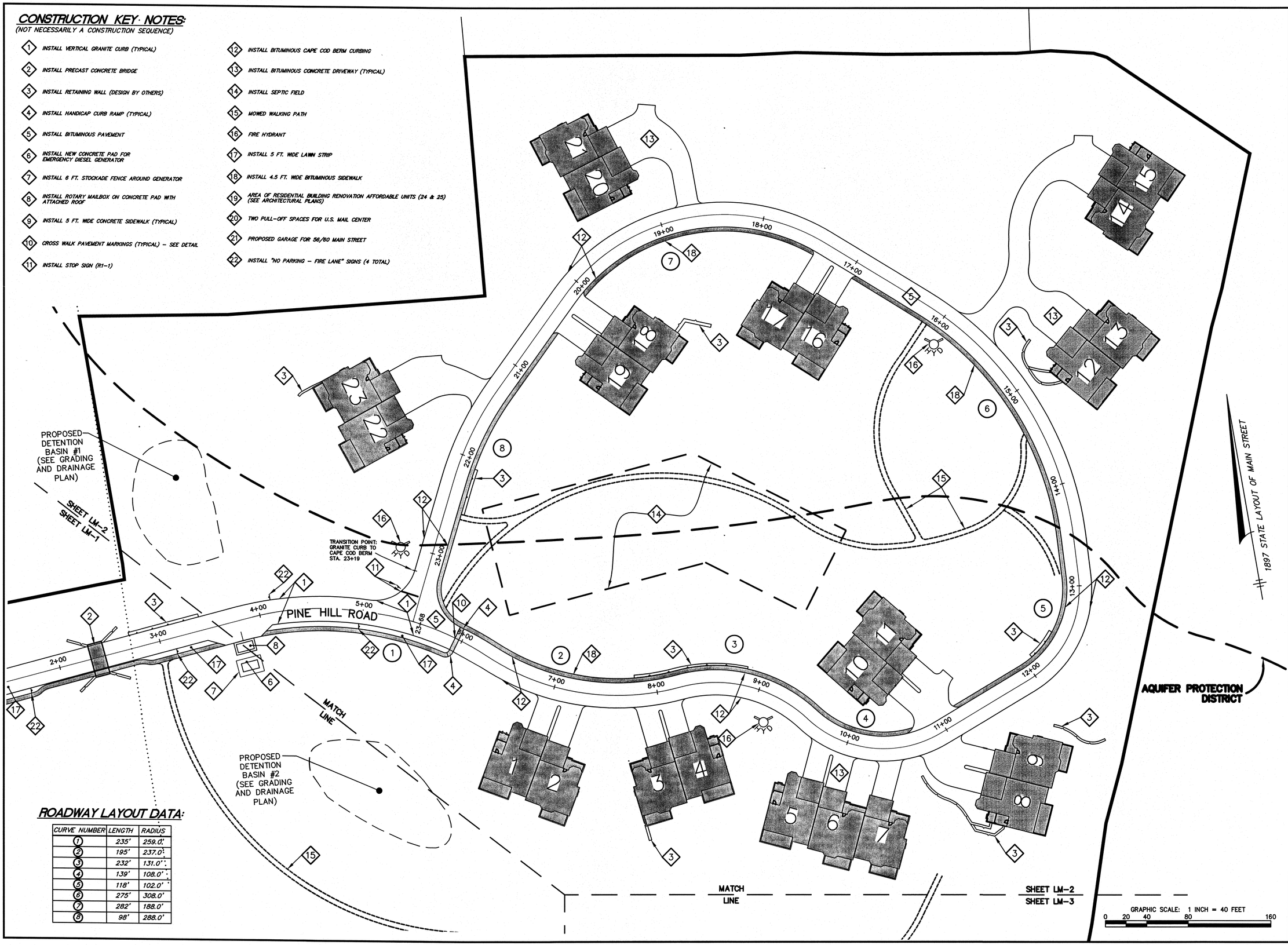

ROADWAY LAYOUT DATA:

CURVE NUMBER	LENGTH	RADIUS
1	235'	259.0'
2	195'	237.0'
3	232'	131.0'
4	139'	108.0'
5	118'	102.0'
6	275'	308.0'
7	282'	188.0'
8	98'	288.0'

PROJECT NAME:

WENHAM PINES

56 & 60 Main Street
Wenham, MA 01984

APPLICANT:

WENHAM PINES LLC.

6 Kimball Lane
Lynnfield, MA 01940

OWNER:

ESTATE OF WILLIAM J. FLYNN

5 Barker Road
Boxford, MA 01921

HANCOCK ASSOCIATES

Civil Engineers

Land Surveyors

Wetland Scientists

185 CENTRE STREET, DANVERS, MA 01923
VOICE (978) 777-3050, FAX (978) 774-7816
WWW.HANCOCKASSOCIATES.COM

COMMONWEALTH OF MASSACHUSETTS
RICHARD A. TALACKO
CIVIL
No. 34026
REGISTERED PROFESSIONAL ENGINEER
7/20/16

NO.	BY	APP	DATE	ISSUE/REVISION DESCRIPTION

DATE:	7/19/2016	DESIGN BY:	RAT
SCALE:	AS SHOWN	DRAWN BY:	JPC
APPRVD. BY:	VVT	CHECK BY:	DID/RAT

LAYOUT AND MATERIALS

PLOT DATE: Jul 20, 2016 10:20 am
PATH: F:\Civil 3D Projects\19400\DWG\

DWG: 19400C1 16070B.dwg
LAYOUT: LM-2
SHEET: 12 OF 34

LM-2

PROJECT NO.: 19400

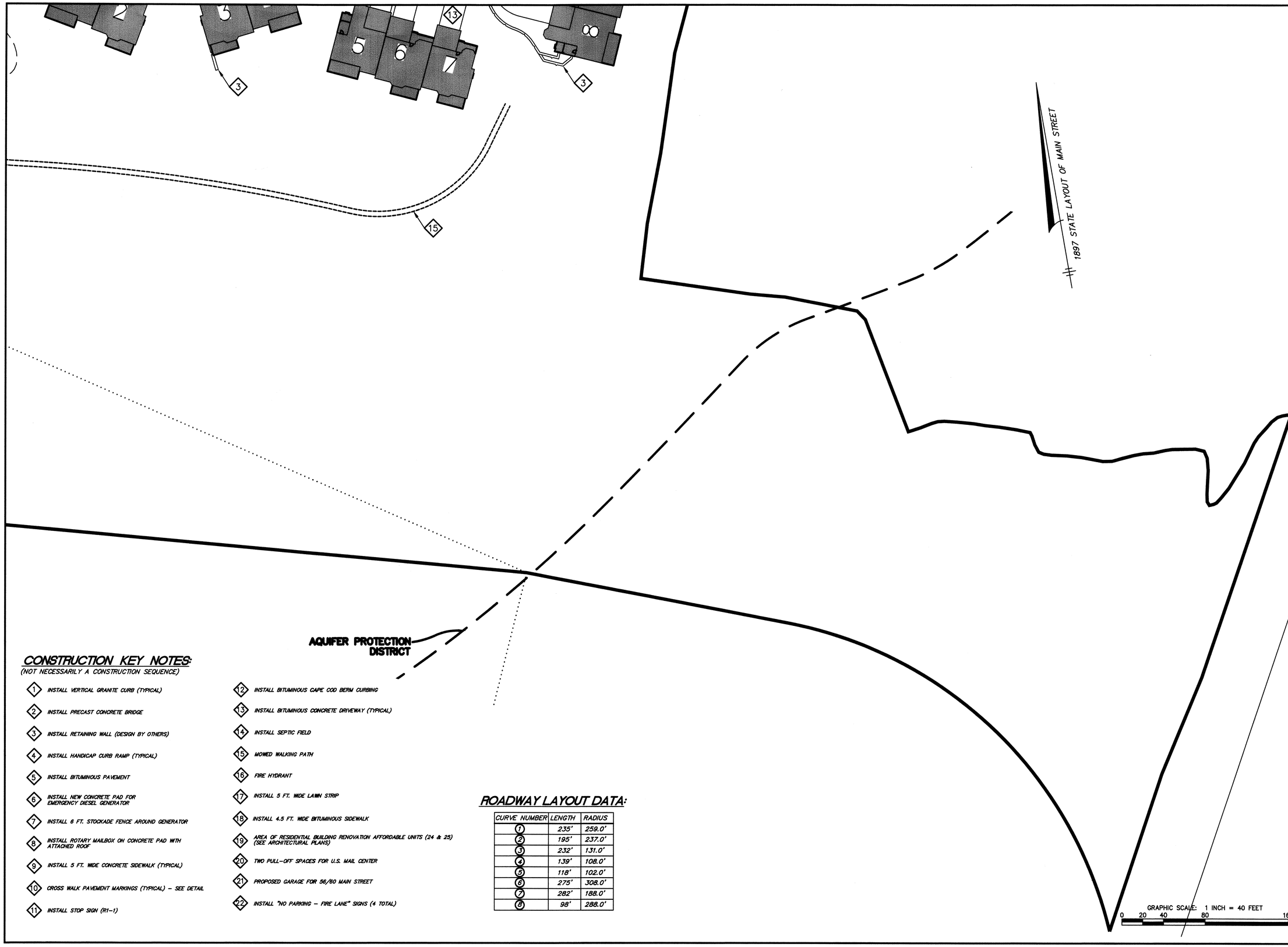

CONSTRUCTION KEY NOTES:

(NOT NECESSARILY A CONSTRUCTION SEQUENCE)

1. INSTALL VERTICAL GRANITE CURB (TYPICAL)
2. INSTALL PRECAST CONCRETE BRIDGE
3. INSTALL RETAINING WALL (DESIGN BY OTHERS)
4. INSTALL HANDICAP CURB RAMP (TYPICAL)
5. INSTALL BITUMINOUS PAVEMENT
6. INSTALL NEW CONCRETE PAD FOR EMERGENCY DIESEL GENERATOR
7. INSTALL 6 FT. STOCKADE FENCE AROUND GENERATOR
8. INSTALL ROTARY MAILBOX ON CONCRETE PAD WITH ATTACHED ROOF
9. INSTALL 5 FT. WIDE CONCRETE SIDEWALK (TYPICAL)
10. CROSS WALK PAVEMENT MARKINGS (TYPICAL) – SEE DETAIL
11. INSTALL STOP SIGN (R1-1)
12. INSTALL BITUMINOUS CAPE COD BERM CURBING
13. INSTALL BITUMINOUS CONCRETE DRIVEWAY (TYPICAL)
14. INSTALL SEPTIC FIELD
15. MOWED WALKING PATH
16. FIRE HYDRANT
17. INSTALL 5 FT. WIDE LAWN STRIP
18. INSTALL 4.5 FT. WIDE BITUMINOUS SIDEWALK
19. AREA OF RESIDENTIAL BUILDING RENOVATION AFFORDABLE UNITS (24 & 25) (SEE ARCHITECTURAL PLANS)
20. TWO PULL-OFF SPACES FOR U.S. MAIL CENTER
21. PROPOSED GARAGE FOR 56/60 MAIN STREET
22. INSTALL "NO PARKING – FIRE LANE" SIGNS (4 TOTAL)

ROADWAY LAYOUT DATA:

CURVE NUMBER	LENGTH	RADIUS
1	235'	259.0'
2	195'	237.0'
3	232'	131.0'
4	139'	108.0'
5	118'	102.0'
6	275'	308.0'
7	282'	188.0'
8	98'	288.0'

PROJECT NAME:

WENHAM PINES

56 & 60 Main Street
Wenham, MA 01984

APPLICANT:

WENHAM PINES LLC.

6 Kimball Lane
Lynnfield, MA 01940

OWNER:

ESTATE OF WILLIAM J. FLYNN

5 Barker Road
Boxford, MA 01921

HANCOCK ASSOCIATES

Civil Engineers

Land Surveyors

Wetland Scientists

185 CENTRE STREET, DANVERS, MA 01923
VOICE (978) 777-3050, FAX (978) 774-7816
WWW.HANCOCKASSOCIATES.COM

COMMONWEALTH OF MASSACHUSETTS
THEODORE J. TALACKO
CIVIL
No. 34026
REGISTERED PROFESSIONAL ENGINEER
7/20/16

NO.	BY	APP	DATE	ISSUE/REVISION DESCRIPTION

DATE:	7/19/2016	DESIGN BY:	RAT
SCALE:	AS SHOWN	DRAWN BY:	JPC
APPRVD. BY:	VVT	CHECK BY:	DID/RAT

LAYOUT AND MATERIALS

PLOT DATE: Jul 20, 2016 10:53 am
PATH: F:\Civil 3D Projects\19400\DWG\

DWG: 19400C1 160708.dwg
LAYOUT: LM-3
SHEET: 13 OF 34

LM-3

PROJECT NO.: 19400

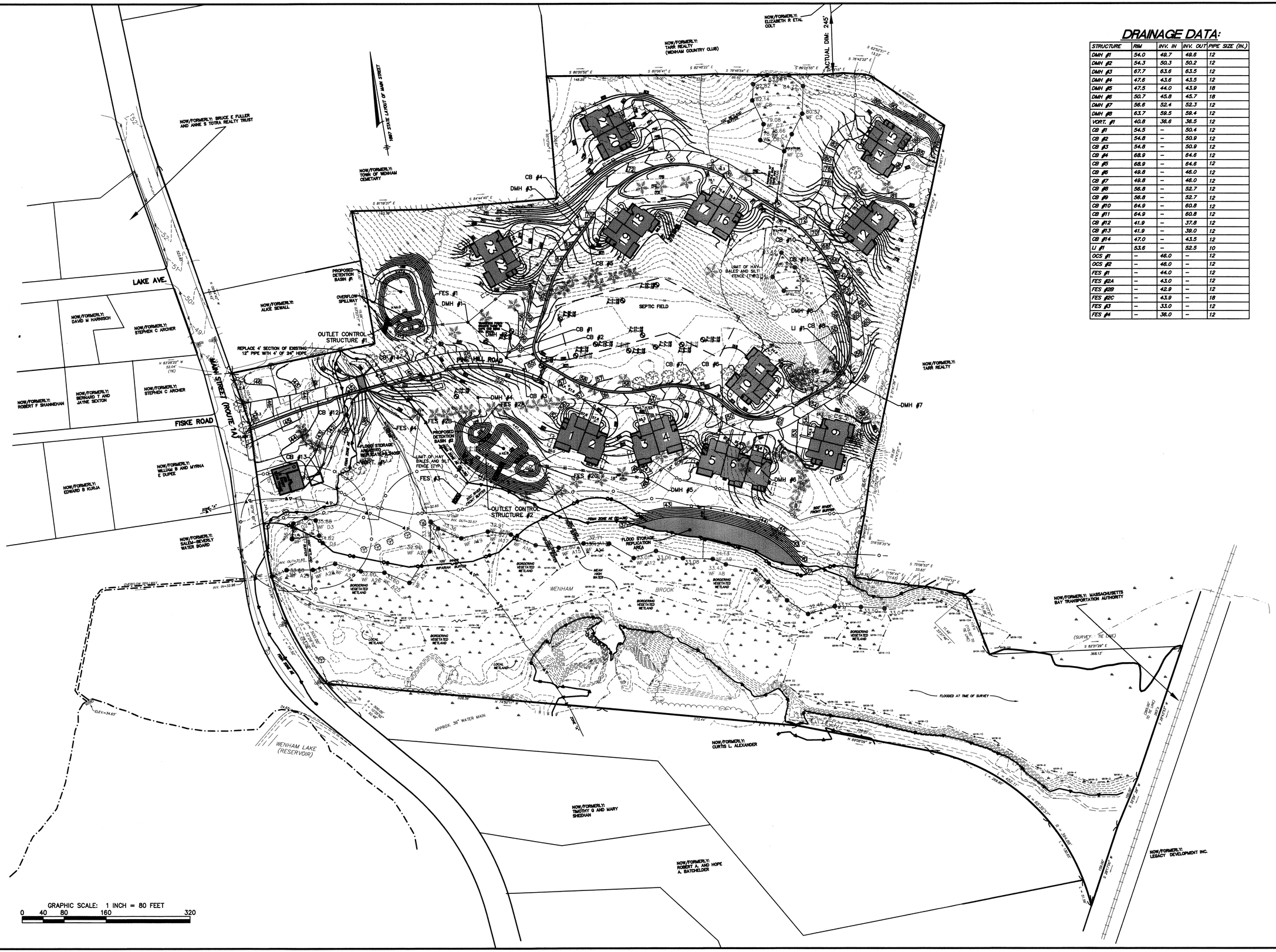

DRAINAGE DATA:

STRUCTURE	RIM	INV. IN	INV. OUT	PIPE SIZE (IN.)
DMH #1	54.0	49.7	49.6	12
DMH #2	54.3	50.3	50.2	12
DMH #3	67.7	63.6	63.5	12
DMH #4	47.6	43.6	43.5	12
DMH #5	47.5	44.0	43.9	18
DMH #6	50.7	45.8	45.7	18
DMH #7	56.6	52.4	52.3	12
DMH #8	63.7	59.5	59.4	12
VORT. #1	40.8	36.6	36.5	12
CB #1	54.5	--	50.4	12
CB #2	54.8	--	50.9	12
CB #3	54.8	--	50.9	12
CB #4	68.9	--	64.6	12
CB #5	68.9	--	64.6	12
CB #6	49.8	--	46.0	12
CB #7	49.8	--	46.0	12
CB #8	56.8	--	52.7	12
CB #9	56.8	--	52.7	12
CB #10	64.9	--	60.8	12
CB #11	64.9	--	60.8	12
CB #12	41.9	--	37.8	12
CB #13	41.9	--	38.0	12
CB #14	47.0	--	43.5	12
LI #1	53.6	--	52.5	10
OCS #1	--	46.0	--	12
OCS #2	--	46.0	--	12
FES #1	--	44.0	--	12
FES #2A	--	43.0	--	12
FES #2B	--	42.9	--	12
FES #2C	--	43.9	--	18
FES #3	--	33.0	--	12
FES #4	--	36.0	--	12

PROJECT NAME:

WENHAM PINES

56 & 60 Main Street
Wenham, MA 01984

APPLICANT:

WENHAM PINES LLC.

6 Kimball Lane
Lynnfield, MA 01940

OWNER:

ESTATE OF WILLIAM J. FLYNN

5 Barker Road
Boxford, MA 01921

HANCOCK ASSOCIATES

Civil Engineers

Land Surveyors

Wetland Scientists

185 CENTRE STREET, DANVERS, MA 01923
VOICE (978) 777-3050, FAX (978) 774-7816
WWW.HANCOCKASSOCIATES.COM

COMMONWEALTH OF MASSACHUSETTS
JOHN PAUL CAMPBELL
CIVIL
No. 34026
REGISTERED PROFESSIONAL ENGINEER
7/20/16

NO.	BY	APP	DATE	ISSUE/REVISION DESCRIPTION

DATE:	7/19/2016	DESIGN BY:	RAT
SCALE:	AS SHOWN	DRAWN BY:	JPC
APPRVD. BY:	VVT	CHECK BY:	DID/RAT

GRADING AND DRAINAGE OVERALL PLAN

PLOT DATE: Jul 20, 2016 10:55 am
PATH: F:\Civil 3D Projects\19400\DWG\

DWG: 19400C1 160708.dwg
LAYOUT: GD
SHEET: 14 OF 34

GD

PROJECT NO.: 19400

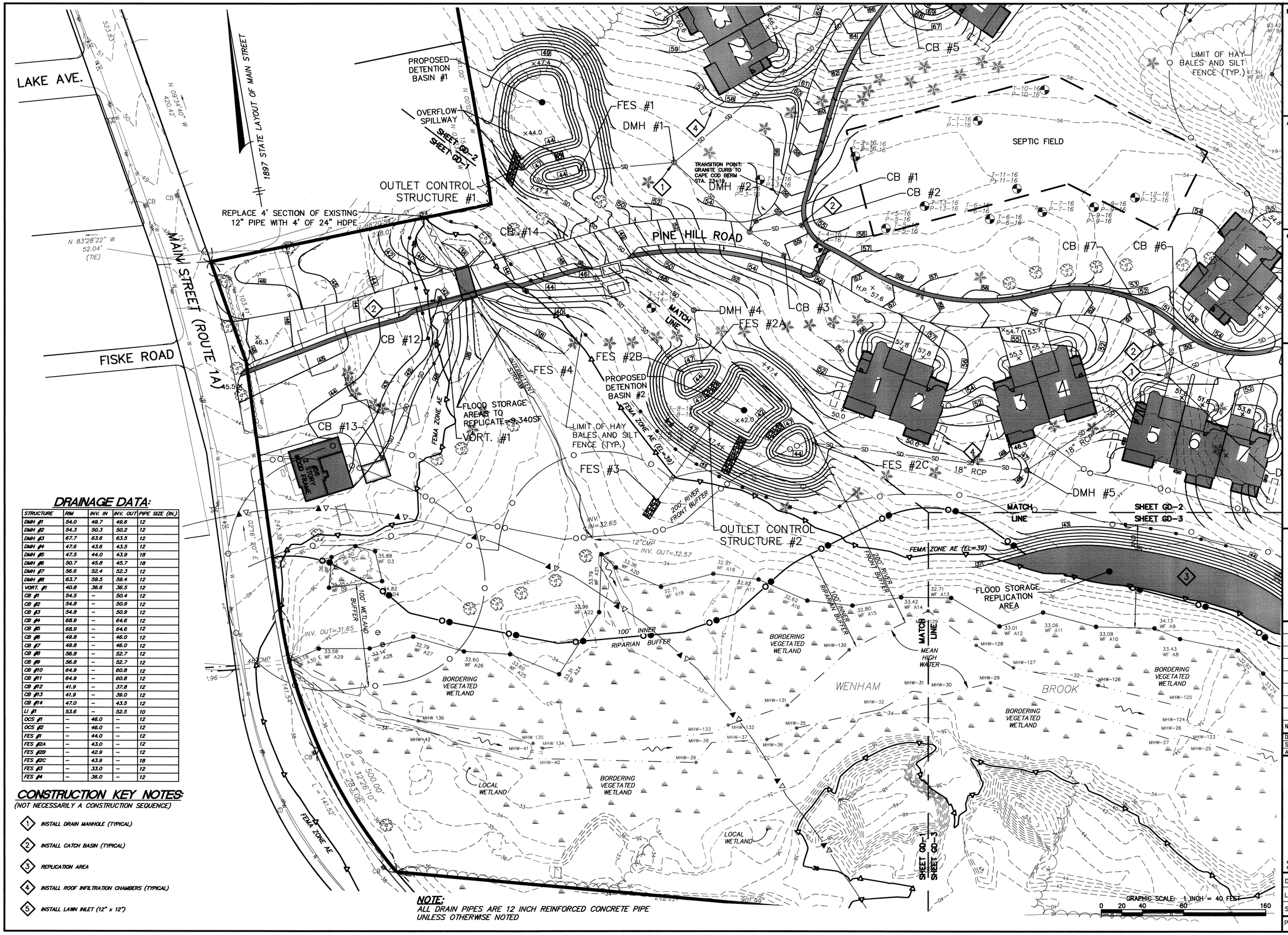

DRAINAGE DATA:

STRUCTURE	RIM	INV. IN	INV. OUT	PIPE SIZE (IN.)
DMH #1	54.0	49.7	49.6	12
DMH #2	54.3	50.3	50.2	12
DMH #3	67.7	63.6	63.5	12
DMH #4	47.6	43.6	43.5	12
DMH #5	47.5	44.0	43.9	18
DMH #6	50.7	45.8	45.7	18
DMH #7	56.6	52.4	52.3	12
DMH #8	63.7	59.5	59.4	12
VORT. #1	40.8	36.6	36.5	12
CB #1	54.5	–	50.4	12
CB #2	54.8	–	50.9	12
CB #3	54.8	–	50.9	12
CB #4	68.9	–	64.6	12
CB #5	68.9	–	64.6	12
CB #6	49.8	–	46.0	12
CB #7	49.8	–	46.0	12
CB #8	56.8	–	52.7	12
CB #9	56.8	–	52.7	12
CB #10	64.9	–	60.8	12
CB #11	64.9	–	60.8	12
CB #12	41.9	–	37.8	12
CB #13	41.9	–	39.0	12
CB #14	47.0	–	43.5	12
LI #1	53.6	–	52.5	10
OCS #1	–	46.0	–	12
OCS #2	–	46.0	–	12
FES #1	–	44.0	–	12
FES #2A	–	43.0	–	12
FES #2B	–	42.9	–	12
FES #2C	–	43.9	–	18
FES #3	–	33.0	–	12
FES #4	–	36.0	–	12

CONSTRUCTION KEY NOTES:

(NOT NECESSARILY A CONSTRUCTION SEQUENCE)

1. INSTALL DRAIN MANHOLE (TYPICAL)
2. INSTALL CATCH BASIN (TYPICAL)
3. REPLICATION AREA
4. INSTALL ROOF INFILTRATION CHAMBERS (TYPICAL)
5. INSTALL LAWN INLET (12" x 12")

NOTE:
ALL DRAIN PIPES ARE 12 INCH REINFORCED CONCRETE PIPE UNLESS OTHERWISE NOTED

PROJECT NAME:

WENHAM PINES

56 & 60 Main Street
Wenham, MA 01984

APPLICANT:

WENHAM PINES LLC.

6 Kimball Lane
Lynnfield, MA 01940

OWNER:

ESTATE OF WILLIAM J. FLYNN

5 Barker Road
Boxford, MA 01921

HANCOCK ASSOCIATES

Civil Engineers

Land Surveyors

Wetland Scientists

185 CENTRE STREET, DANVERS, MA 01923
VOICE (978) 777-3050, FAX (978) 774-7816
WWW.HANCOCKASSOCIATES.COM

COMMONWEALTH OF MASSACHUSETTS
RAYMOND A. TALACKO
CIVIL
No. 34026
REGISTERED PROFESSIONAL ENGINEER
7/20/16

NO.	BY	APP	DATE	ISSUE/REVISION DESCRIPTION

DATE:	7/19/2016	DESIGN BY:	RAT
SCALE:	AS SHOWN	DRAWN BY:	JPC
APPRVD. BY:	VVT	CHECK BY:	RAT

GRADING AND DRAINAGE

PLOT DATE: Jul 20, 2016 10:56 am
PATH: F:\Civil 3D Projects\19400\DWG\

DWG: 19400C1 160708.dwg
LAYOUT: GD-1
SHEET: 15 OF 34

GD-1

PROJECT NO.: 19400

DRAINAGE DATA:

STRUCTURE	RIM	INV. IN	INV. OUT	PIPE SIZE (IN.)
DMH #1	54.0	49.7	49.6	12
DMH #2	54.3	50.3	50.2	12
DMH #3	67.7	63.6	63.5	12
DMH #4	47.6	43.6	43.5	12
DMH #5	47.5	44.0	43.9	18
DMH #6	50.7	45.8	45.7	18
DMH #7	56.6	52.4	52.3	12
DMH #8	63.7	59.5	59.4	12
VORT. #1	40.8	36.6	36.5	12
CB #1	54.5	–	50.4	12
CB #2	54.8	–	50.9	12
CB #3	54.8	–	50.9	12
CB #4	68.9	–	64.6	12
CB #5	68.9	–	64.6	12
CB #6	49.8	–	46.0	12
CB #7	49.8	–	46.0	12
CB #8	56.8	–	52.7	12
CB #9	56.8	–	52.7	12
CB #10	64.9	–	60.8	12
CB #11	64.9	–	60.8	12
CB #12	41.9	–	37.8	12
CB #13	41.9	–	38.0	12
CB #14	47.0	–	43.5	12
LI #1	53.6	–	52.5	10
OCS #1	–	46.0	–	12
OCS #2	–	46.0	–	12
FES #1	–	44.0	–	12
FES #2A	–	43.0	–	12
FES #2B	–	42.9	–	12
FES #2C	–	43.9	–	18
FES #3	–	33.0	–	12
FES #4	–	36.0	–	12

NOTE:
ALL DRAIN PIPES ARE 12 INCH REINFORCED CONCRETE PIPE UNLESS OTHERWISE NOTED

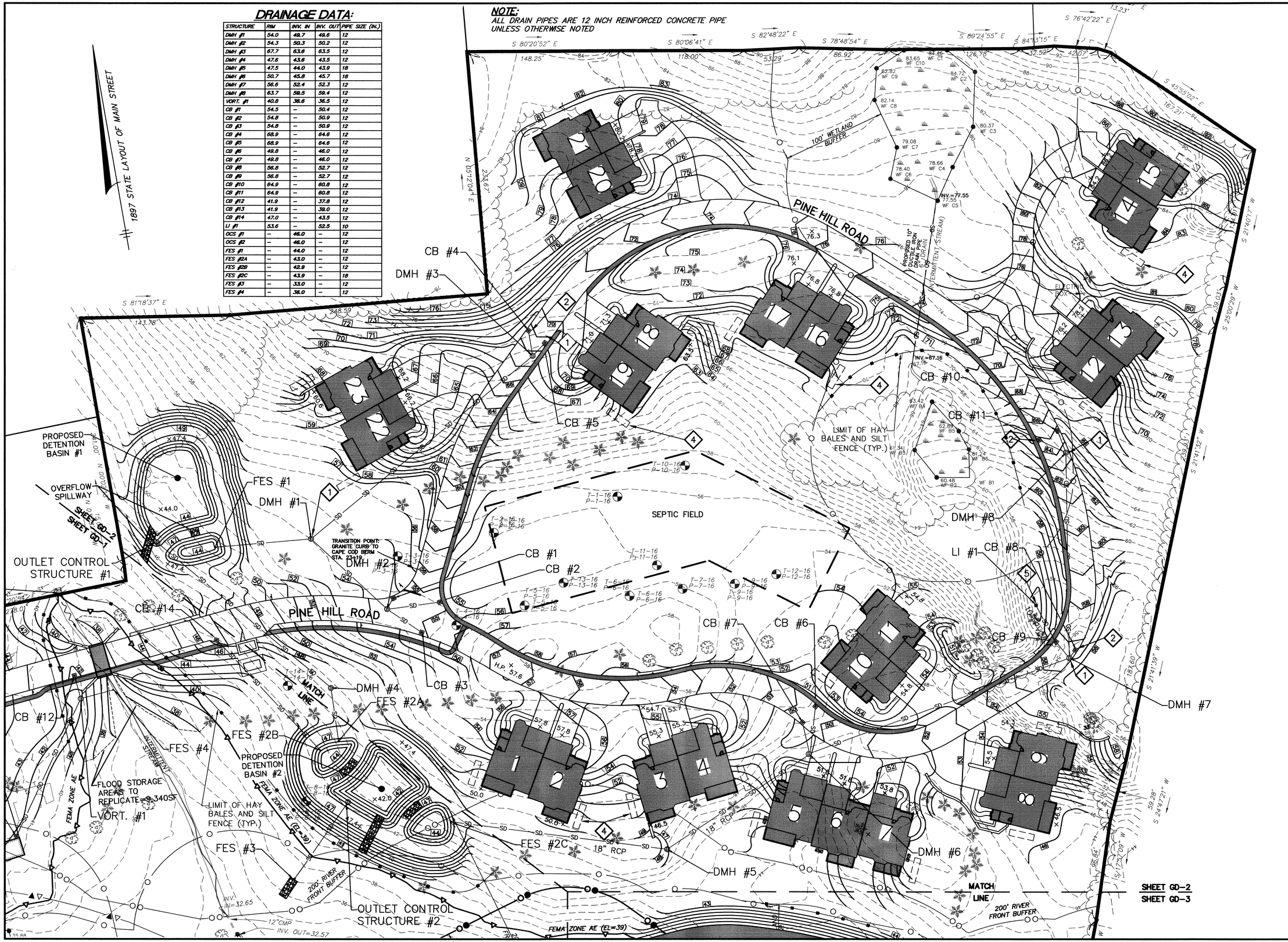

PROJECT NAME:

WENHAM PINES

56 & 60 Main Street
Wenham, MA 01984

APPLICANT:

WENHAM PINES LLC.

6 Kimball Lane
Lynnfield, MA 01940

OWNER:

ESTATE OF WILLIAM J. FLYNN

5 Barker Road
Boxford, MA 01921

HANCOCK ASSOCIATES

Civil Engineers

Land Surveyors

Wetland Scientists

185 CENTRE STREET, DANVERS, MA 01923
VOICE (978) 777-3050, FAX (978) 774-7816
WWW.HANCOCKASSOCIATES.COM

COMMONWEALTH OF MASSACHUSETTS
TAZACKO
CIVIL
No. 34026
REGISTERED PROFESSIONAL ENGINEER
7/20/16

NO.	BY	APP	DATE	ISSUE/REVISION DESCRIPTION

DATE:	7/19/2016	DESIGN BY:	RAT
SCALE:	AS SHOWN	DRAWN BY:	JPC
APPRVD. BY:	VVT	CHECK BY:	RAT

GRADING AND DRAINAGE

PLOT DATE: Jul 20, 2016 10:56 am
PATH: F:\Civil 3D Projects\19400\DWG\

DWG:	19400C1 160708.dwg
LAYOUT:	GD-2
SHEET:	16 OF 34
PROJECT NO.:	19400

GD-2

NOTE:
ALL DRAIN PIPES ARE 12 INCH REINFORCED CONCRETE PIPE UNLESS OTHERWISE NOTED

PROJECT NAME:

WENHAM PINES

56 & 60 Main Street
Wenham, MA 01984

APPLICANT:

WENHAM PINES LLC.

6 Kimball Lane
Lynnfield, MA 01940

OWNER:

ESTATE OF WILLIAM J. FLYNN

5 Barker Road
Boxford, MA 01921

HANCOCK ASSOCIATES

Civil Engineers

Land Surveyors

Wetland Scientists

185 CENTRE STREET, DANVERS, MA 01923
VOICE (978) 777-3050, FAX (978) 774-7816
WWW.HANCOCKASSOCIATES.COM

COMMONWEALTH OF MASSACHUSETTS
VACLAV V. ALBERS
CIVIL
No. 34026
REGISTERED PROFESSIONAL ENGINEER
7/20/16

NO.	BY	APP	DATE	ISSUE/REVISION DESCRIPTION

DATE:	7/19/2016	DESIGN BY:	RAT
SCALE:	AS SHOWN	DRAWN BY:	JPC
APPRVD. BY:	VVT	CHECK BY:	RAT

GRADING AND DRAINAGE

PLOT DATE: Jul 20, 2016 10:57 am
PATH: F:\Civil 3D Projects\19400\DWG\

DWG: 19400C1 160708.dwg
LAYOUT: GD-3
SHEET: 17 OF 34

GD-3

PROJECT NO.: 19400

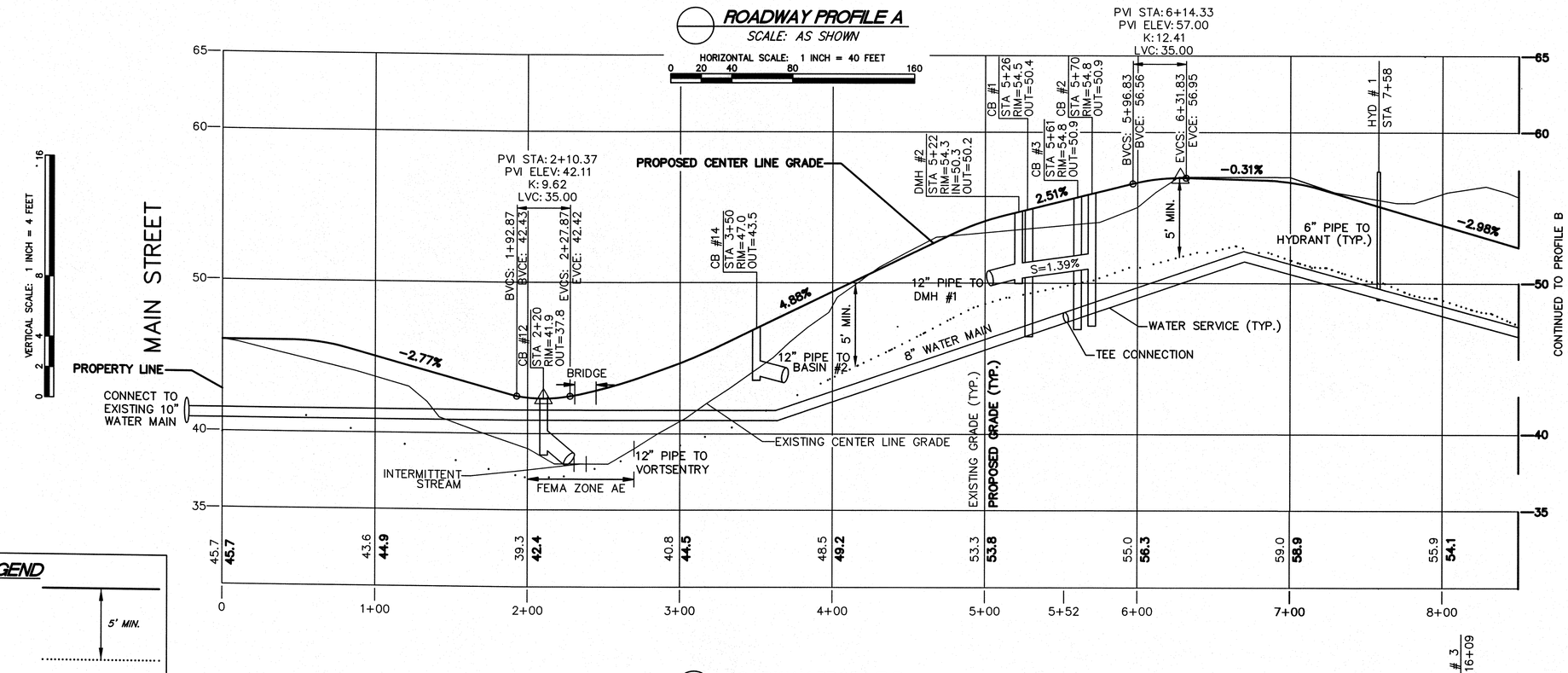

LEGEND

GROUNDCOVER:
5' MIN. FROM FINISHED GRADE

5' MIN.

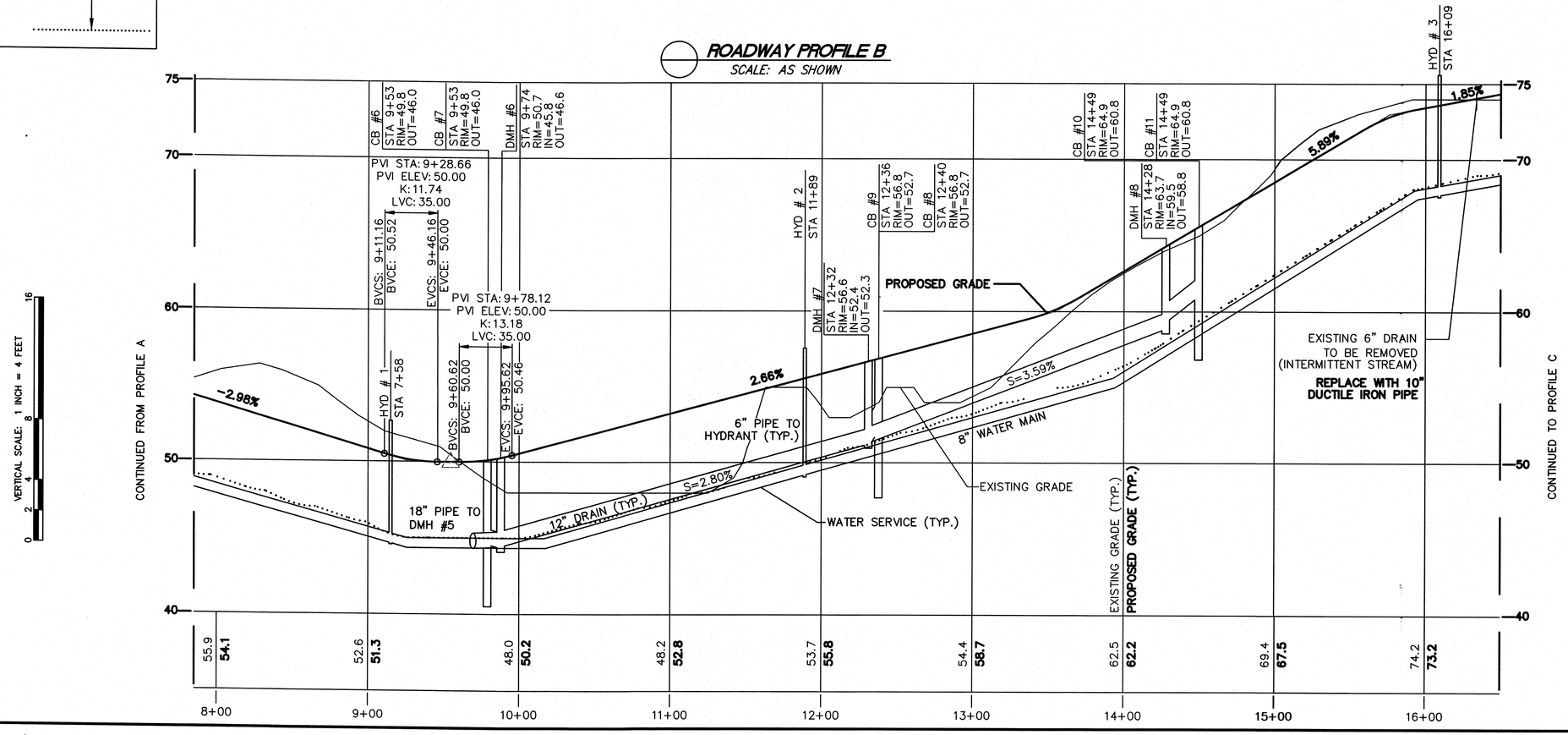

PROJECT NAME:

WENHAM PINES

56-60 Main Street
Wenham, Massachusetts 01984

APPLICANT:

WENHAM PINES LLC

6 Kimball Lane
Lynnfield, Massachusetts 01940

OWNER:

ESTATE OF WILLIAM J. FLYNN

HANCOCK ASSOCIATES

Civil Engineers
Land Surveyors
Wetland Scientists

185 CENTRE STREET, DANVERS, MA 01923
VOICE (978) 777-3050, FAX (978) 774-7816
WWW.HANCOCKASSOCIATES.COM

COMMONWEALTH OF MASSACHUSETTS
RICHARD A. TALACKO
CIVIL
No. 34026
REGISTERED PROFESSIONAL ENGINEER
7/20/16

NO.	BY	APP	DATE	ISSUE/REVISION DESCRIPTION

DATE:	7/19/2016	DESIGN BY:	RAT
SCALE:	AS SHOWN	DRAWN BY:	JJP
APPRVD. BY:	VVT	CHECK BY:	RAT

PINE HILL ROADWAY AND UTILITY PROFILE

PLOT DATE: Jul 20, 2016 10:15 am
PATH: P:\Dwl 3D Projects\19400\DWG\

DWG:	19400 Road Profile 7-716.dwg
LAYOUT:	PROFILE
SHEET:	18 OF 34
PROJECT NO.:	19400

PR-1

ROADWAY PROFILE C

SCALE: AS SHOWN

HORIZONTAL SCALE: 1 INCH = 40 FEET

0 20 40 80 160

VERTICAL SCALE: 1 INCH = 4 FEET

0 2 4 8 16

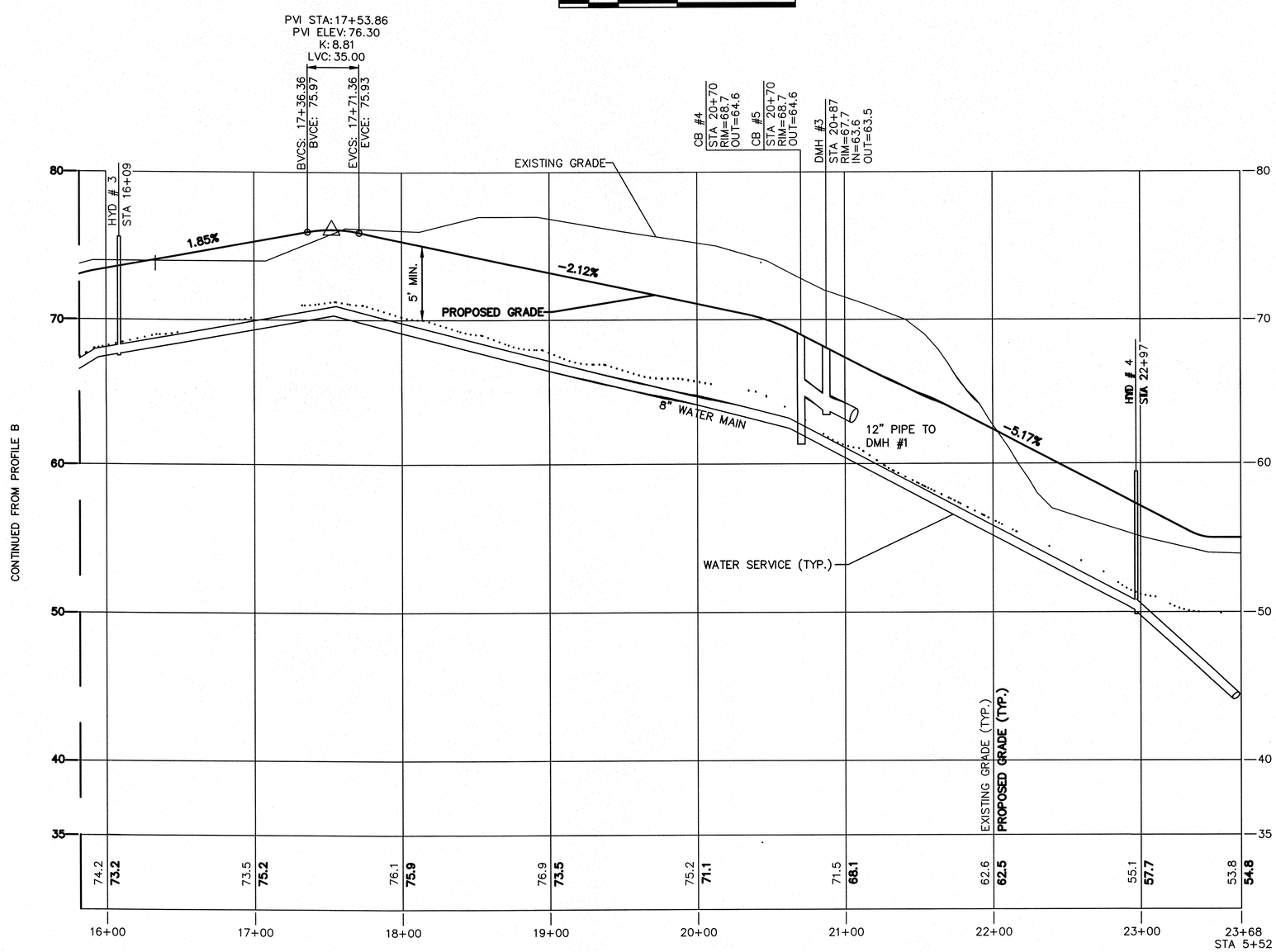

CONTINUED FROM PROFILE B

PROJECT NAME:

WENHAM PINES

56-60 Main Street
Wenham, Massachusetts 01984

APPLICANT:

WENHAM PINES LLC

6 Kimball Lane
Lynnfield, Massachusetts 01940

OWNER:

ESTATE OF WILLIAM J. FLYNN

HANCOCK ASSOCIATES

Civil Engineers
Land Surveyors
Wetland Scientists

185 CENTRE STREET, DANVERS, MA 01923
VOICE (978) 777-3050, FAX (978) 774-7816
WWW.HANCOCKASSOCIATES.COM

COMMONWEALTH OF MASSACHUSETTS
VACLAV V. VITOVEC
No. 34085
REGISTERED PROFESSIONAL ENGINEER
7/20/16

NO.	BY	APP	DATE	ISSUE/REVISION DESCRIPTION

DATE:	7/19/2016	DESIGN BY:	RAT
SCALE:	AS SHOWN	DRAWN BY:	JJP
APPRVD. BY:	VVT	CHECK BY:	RAT

PINE HILL ROADWAY AND UTILITY PROFILE

PLOT DATE: Jul 20, 2016 10:13 am
PATH: F:\Civil 3D Projects\19400\DWG\

DWG: 19400 Road Profile 7-716.dwg
LAYOUT: PROFILE
SHEET: 19 OF 34

PR-2

PROJECT NO.: 19400

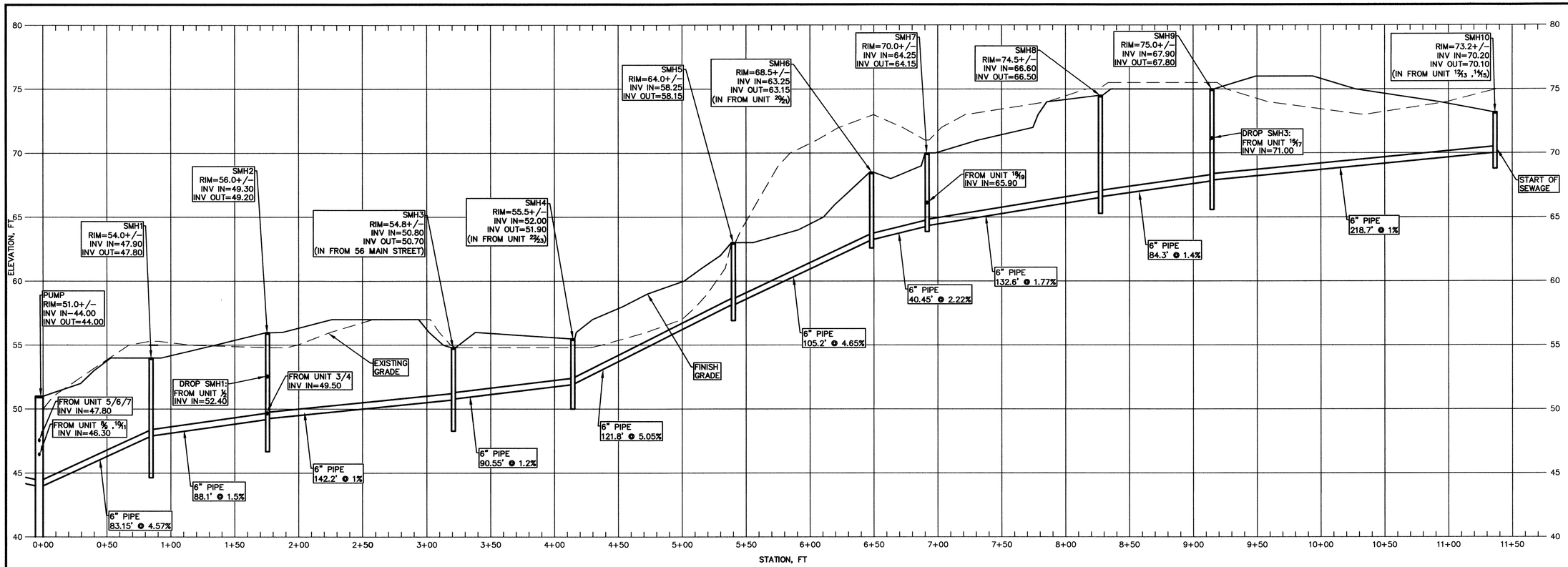

SEWER AND SEPTIC SYSTEM PROFILE

SCALE: 1"=40' HORZ
1"=4' VERT

UNIT 10/11 TO PUMP

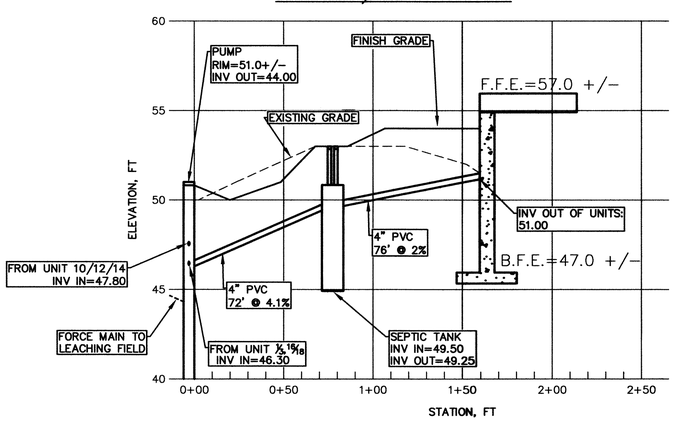

UNIT 1/2 TO SMH2

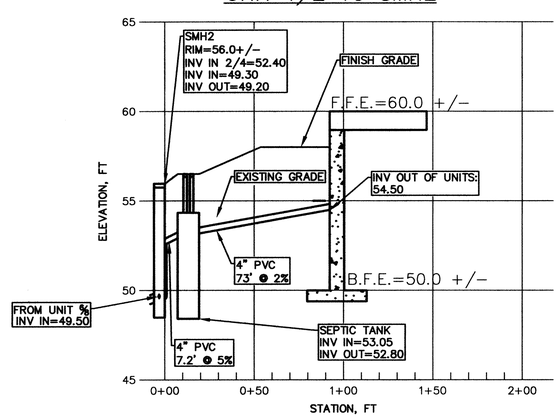

SEWER AND SEPTIC SYSTEM PROFILE

SCALE: 1"=40' HORZ
1"=4' VERT

UNIT 16/17 TO SMH9

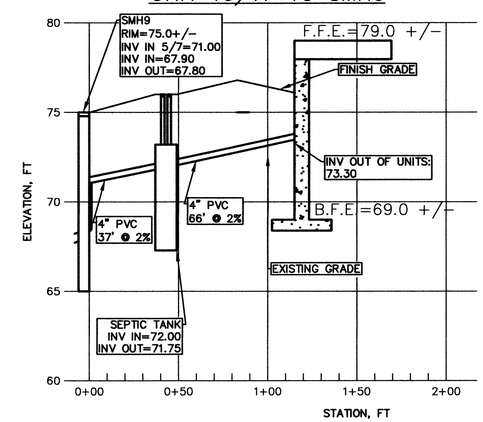

NOTE:
****REFER TO 'COMBINED UTILITIES' FOR LOCATION OF MANHOLES AND PUMP****

GRAPHIC SCALE: 1 INCH = 40 FEET
0 20 40 80 160

PROJECT NAME:
WENHAM PINES
56 & 60 Main Street
Wenham, MA 01984

APPLICANT:
WENHAM PINES LLC.
6 Kimball Lane
Lynnfield, MA 01940

OWNER:
ESTATE OF WILLIAM J. FLYNN
5 Barker Road
Boxford, MA 01921

HANCOCK ASSOCIATES
Civil Engineers
Land Surveyors
Wetland Scientists
185 CENTRE STREET, DANVERS, MA 01923
VOICE (978) 777-3050, FAX (978) 774-7816
WWW.HANCOCKASSOCIATES.COM

COMMONWEALTH OF MASSACHUSETTS
WILLIAM V. MACKAY
TALACKO
CIVIL
No. 34026
REGISTERED PROFESSIONAL ENGINEER
7/20/16

NO.	BY	APP	DATE	ISSUE/REVISION DESCRIPTION
1	TRD	VVT	7/14/16	REVISED INVERTS

DATE: 7/19/2016 DESIGN BY: VVT
SCALE: AS SHOWN DRAWN BY: TRD
APPRVD. BY: RAT CHECK BY:

SEWAGE PROFILE 1

PLOT DATE: Jul 20, 2016 10:57 am
PATH: F:\Civil 3D Projects\19400\DWG\

DWG: 19400C1 160708.dwg
LAYOUT: PRO-1
SHEET: 20 OF 34
PROJECT NO.: 19400

UNIT 3/4 TO SMH2

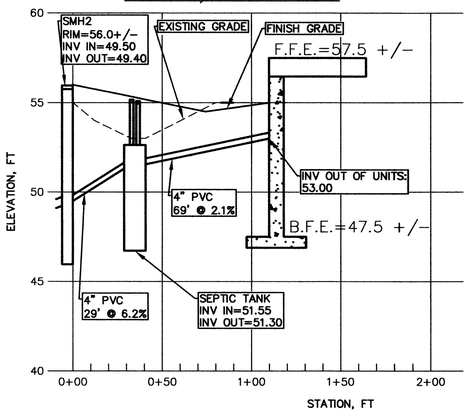

UNIT 18/19 TO SMH7

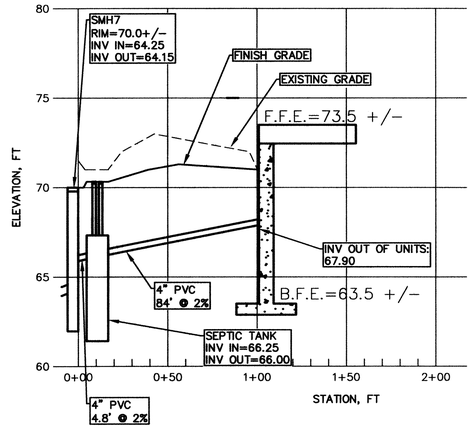

UNIT 5/6/7 TO PUMP

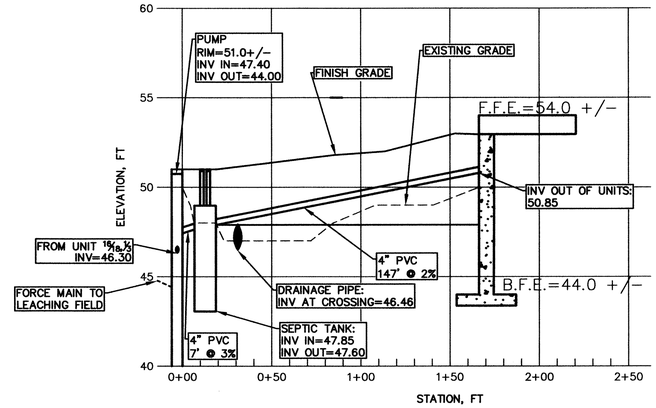

UNIT 8/9 TO PUMP

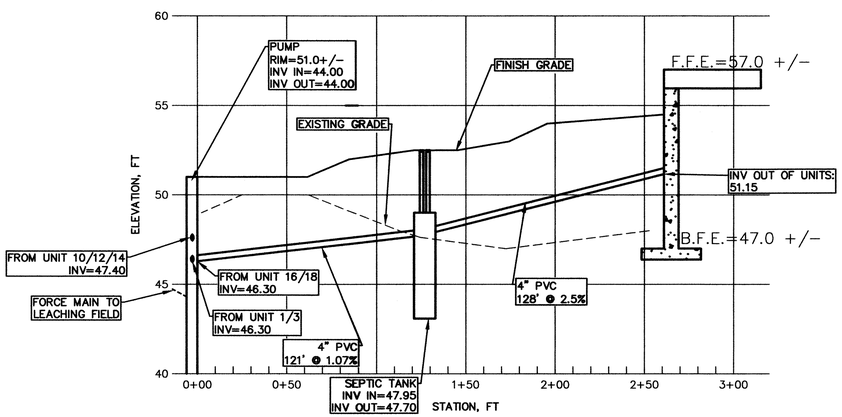

UNIT 12/13 TO SMH10

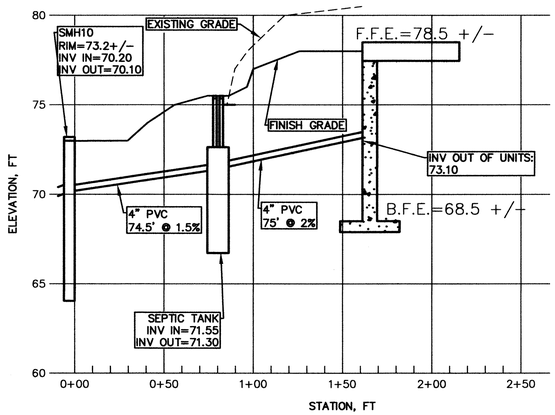

SEWER AND SEPTIC SYSTEM PROFILES

SCALE: 1"=40' HORZ
1"=4' VERT

NOTE:
REFER TO 'COMBINED UTILITIES' FOR LOCATION OF MANHOLES AND PUMP

GRAPHIC SCALE: 1 INCH = 40 FEET
0 20 40 80 160

PROJECT NAME:
WENHAM PINES
56 & 60 Main Street
Wenham, MA 01984

APPLICANT:
WENHAM PINES LLC.
6 Kimball Lane
Lynnfield, MA 01940

OWNER:
ESTATE OF WILLIAM J. FLYNN
5 Barker Road
Boxford, MA 01921

HANCOCK ASSOCIATES
Civil Engineers
Land Surveyors
Wetland Scientists
185 CENTRE STREET, DANVERS, MA 01923
VOICE (978) 777-3050, FAX (978) 774-7816
WWW.HANCOCKASSOCIATES.COM

COMMONWEALTH OF MASSACHUSETTS
VACUUM TRAINING
CIVIL
No. 34026
REGISTERED PROFESSIONAL ENGINEER
7/20/16

NO.	BY	APP	DATE	ISSUE/REVISION DESCRIPTION
1	TRD	VVT	7/14/16	REVISED INVERTS

DATE:	7/19/2016	DESIGN BY:	VVT
SCALE:	AS SHOWN	DRAWN BY:	TRD
APPRVD. BY:	RAT	CHECK BY:	

SEWAGE PROFILE 2

PLOT DATE: Jul 20, 2016 10:57 am
PATH: F:\Civil 3D Projects\19400\DWG\

DWG: 19400C1 160708.dwg
LAYOUT: PRO-2
SHEET: 21 OF 34
PROJECT NO.: 19400

UNIT 20/21 TO SMH6

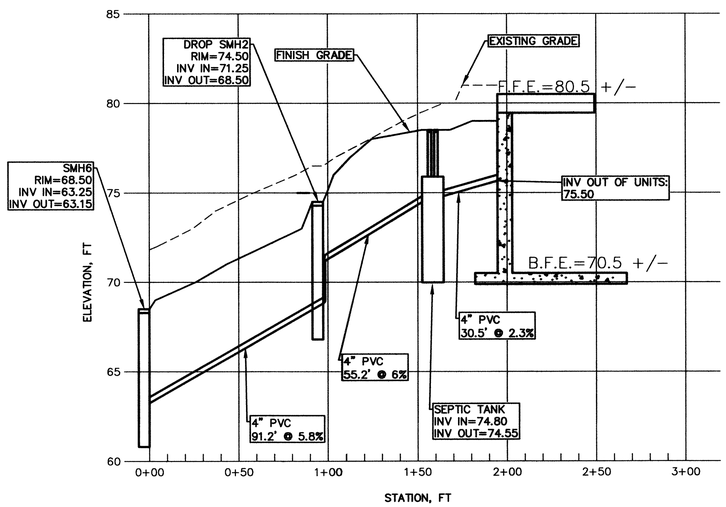

UNIT 22/23 TO SMH4

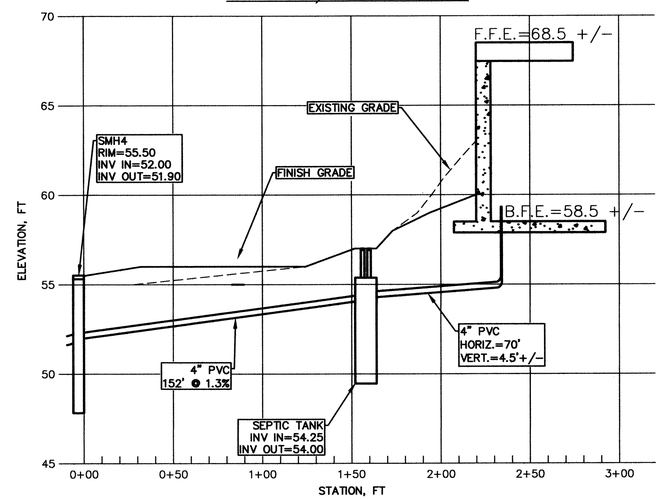

UNIT 14/15 TO SMH10

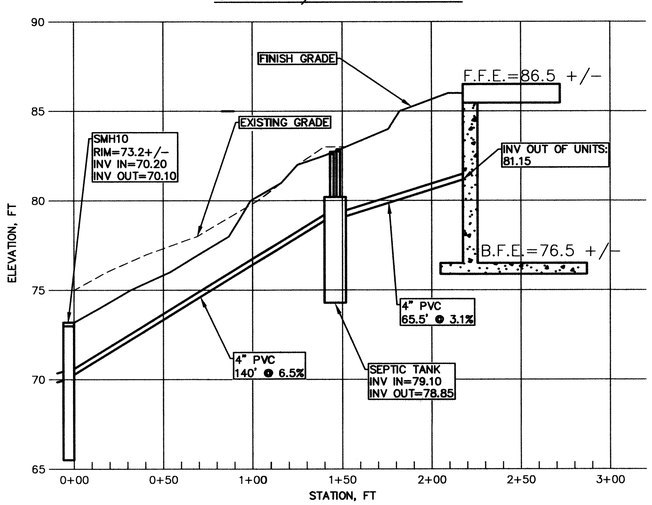

RENOVATED RESIDENTIAL BUILDING @ 56 MAIN STREET TO SMH3

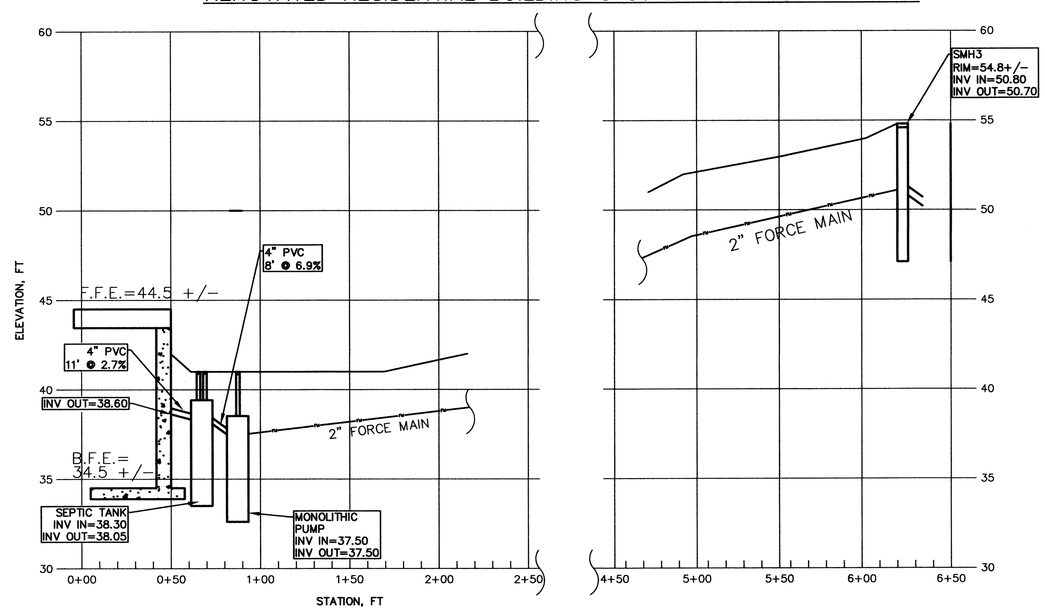

NOTE:
REFER TO 'COMBINED UTILITIES' FOR LOCATION OF MANHOLES AND PUMP

SEWER AND SEPTIC SYSTEM PROFILES

SCALE: 1"=40' HORZ
1"=4' VERT

GRAPHIC SCALE: 1 INCH = 40 FEET
0 20 40 80 160

PROJECT NAME:
WENHAM PINES
56 & 60 Main Street
Wenham, MA 01984

APPLICANT:
WENHAM PINES LLC.
6 Kimball Lane
Lynnfield, MA 01940

OWNER:
ESTATE OF WILLIAM J. FLYNN
5 Barker Road
Boxford, MA 01921

HANCOCK ASSOCIATES
Civil Engineers
Land Surveyors
Wetland Scientists
185 CENTRE STREET, DANVERS, MA 01923
VOICE (978) 777-3050, FAX (978) 774-7816
WWW.HANCOCKASSOCIATES.COM

COMMONWEALTH OF MASSACHUSETTS
TALAGA
CIVIL
No. 34026
REGISTERED PROFESSIONAL ENGINEER
7/20/16

NO.	BY	APP	DATE	ISSUE/REVISION DESCRIPTION
1	TRD	VVT	7/14/16	REVISED INVERTS

DATE:	7/19/2016	DESIGN BY:	VVT
SCALE:	AS SHOWN	DRAWN BY:	TRD
APPRVD. BY:	RAT	CHECK BY:	

SEWAGE PROFILE 3

PLOT DATE: Jul 20, 2016 10:58 am
PATH: F:\Civil 3D Projects\19400\DWG\

DWG: 19400C1 16070B.dwg
LAYOUT: PRO-3
SHEET: 22 OF 34
PROJECT NO.: 19400

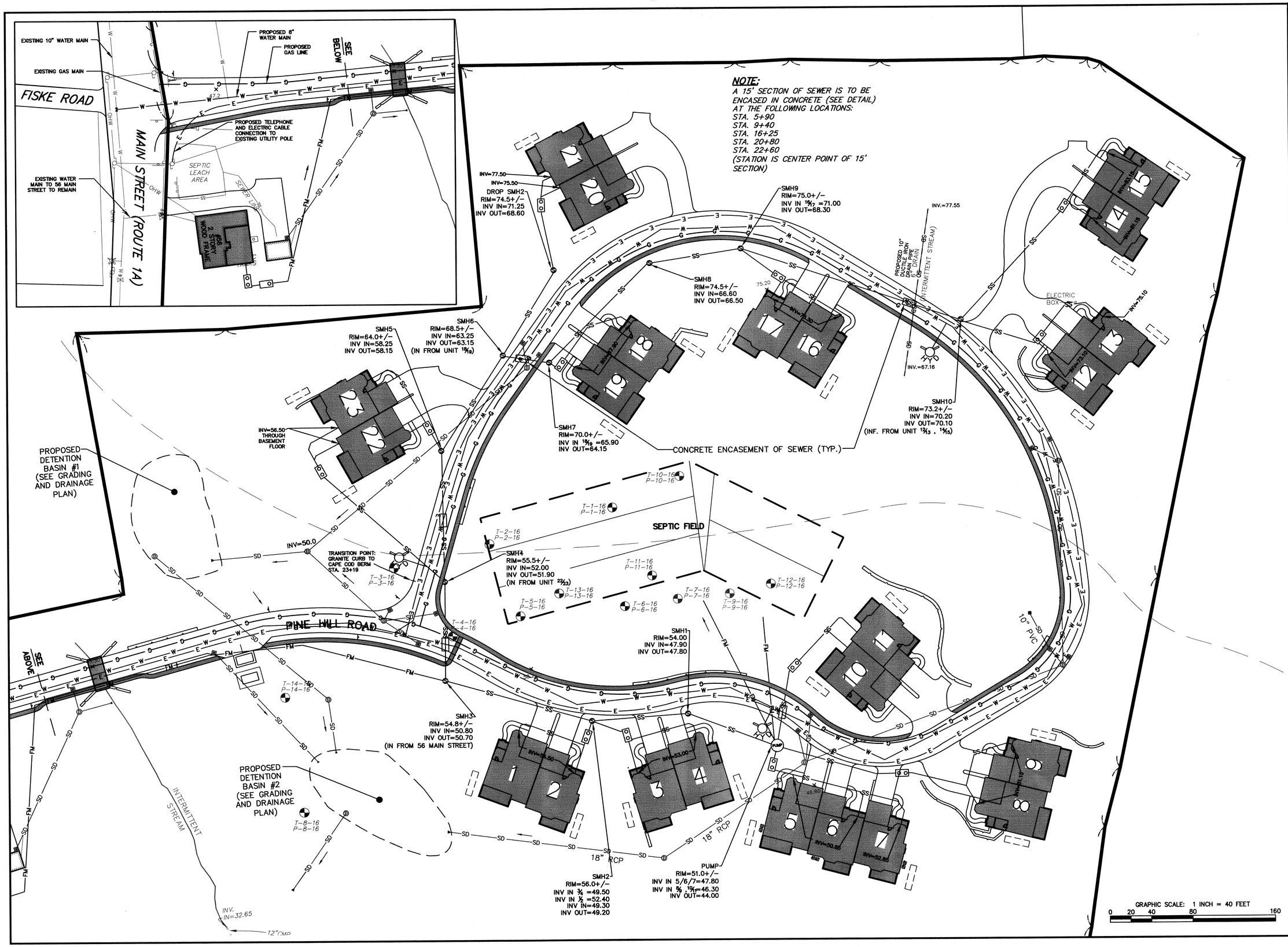

PROJECT NAME:

WENHAM PINES

56 & 60 Main Street
Wenham, MA 01984

APPLICANT:

WENHAM PINES LLC.

6 Kimball Lane
Lynnfield, MA 01940

OWNER:

ESTATE OF WILLIAM J. FLYNN

5 Barker Road
Boxford, MA 01921

HANCOCK ASSOCIATES

Civil Engineers

Land Surveyors

Wetland Scientists

185 CENTRE STREET, DANVERS, MA 01923
VOICE (978) 777-3050, FAX (978) 774-7816
WWW.HANCOCKASSOCIATES.COM

COMMONWEALTH OF MASSACHUSETTS
VACLAV V. PALACIO
No. 34026
REGISTERED PROFESSIONAL ENGINEER
7/20/16

NO.	BY	APP	DATE	ISSUE/REVISION DESCRIPTION

DATE:	7/19/2016	DESIGN BY:	RAT
SCALE:	AS SHOWN	DRAWN BY:	JPC
APPRVD. BY:	VVT	CHECK BY:	RAT

COMBINED UTILITIES

PLOT DATE: Jul 20, 2016 10:58 am
PATH: F:\Civil 3D Projects\19400\DWG\

DWG: 19400C1 160708.dwg
LAYOUT: UTILITIES
SHEET: 23 OF 34

CU

PROJECT NO.: 19400

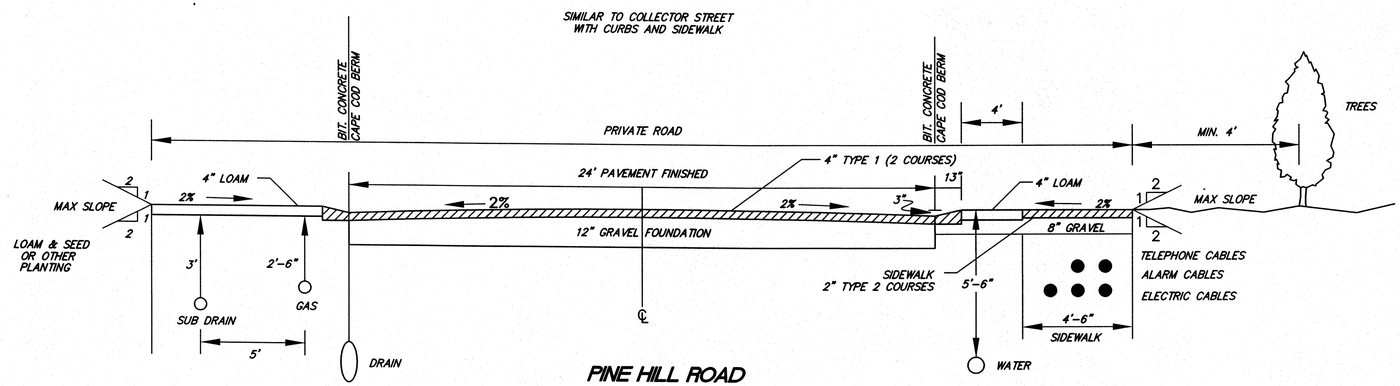

PINE HILL ROAD (PRIVATE ROAD)

TYPICAL CROSS SECTION
NOT TO SCALE

NOTE:
SECTION OF NEW ROADWAY WHICH CONNECTS TO MAIN STREET (STA 0+00 TO STA 5+90) WILL HAVE VERTICAL GRANITE CURB (6" REVEAL) ON BOTH SIDES INSTEAD OF BITUMINOUS CAPE COD BERM WHICH WILL BE INSTALLED ON THE REMAINDER OF THE ROADWAY SYSTEM.

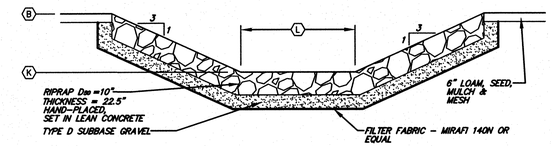

CROSS-SECTION - EMERGENCY SPILLWAY THROUGH BERM

SEE SCHEDULE B

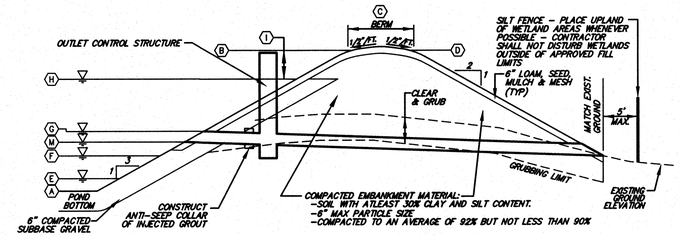

SECTION THROUGH RETENTION/DETENTION FACILITY

SEE SCHEDULE B

SCHEDULE B - EMBANKMENT STRUCTURE		
	DIMENSION / ELEVATION	DIMENSION / ELEVATION
	BASIN #1	BASIN #2
(A) POND BASE ELEVATION	44.0	42.0
(B) TOP OF BASIN AT INSIDE OF BERM ELEVATION	47.0	47.0
(C) WIDTH OF BERM	5' MIN. AND 10' FOR ACCESS TO THE OUTLET STRUCTURE	5' MIN. AND 10' FOR ACCESS TO THE OUTLET STRUCTURE
(D) TOP OF BASIN AT OUTSIDE OF BERM ELEVATION	47.0	47.0
(E) 2-YEAR STAGE ELEVATION	44.0	42.0
(F) 10-YEAR STAGE ELEVATION	44.5	43.1
(G) 25-YEAR STAGE ELEVATION	45.1	44.0
(H) 100-YEAR STAGE ELEVATION	46.1	45.5
(I) FREEBOARD (100-YR. STORM)	0.9'	1.5'
(K) CREST OF SPILLWAY ELEVATION	48.2	48.0
(L) WIDTH OF SPILLWAY	10'	10'
(M) BASIN OUTLET PIPE	46.0	46.0

DETENTION BASIN

TYPICAL CROSS SECTION
NOT TO SCALE

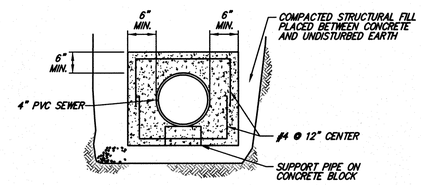

NOTE: REINFORCING STEEL TO BE USED ONLY WHEN DEPTH OF COVER TO TOP OF SURFACE OF CONCRETE IS 5'-0" OR LESS

CONCRETE ENCASEMENT FOR PIPE

TYPICAL CROSS SECTION
NOT TO SCALE

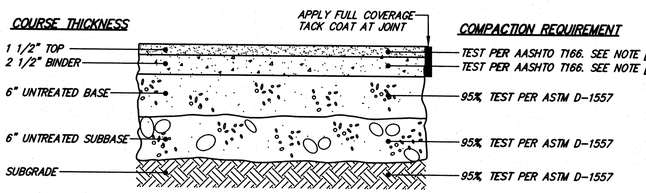

NOTES:
[1] COMPACT TO TEST AVERAGE OF 96%, NO TEST LOWER THAN 94%

MATERIAL	SPECIFICATION	MAXIMUM AGGREGATE OR PARTICLE SIZE (IN.)
TOP - BITUMINOUS CONCRETE	MDOT M3.11.03 CLASS I, TYPE I-1	1/2
BINDER- BITUMINOUS CONCRETE	MDOT M3.11.03 CLASS I, TYPE I-1	1
BASE - PROCESSED GRAVEL	MDOT M1.03.1	3
SUBBASE	MDOT M1.03.1	3
UNSUITABLE SUBGRADE - ORDINARY BORROW	MDOT M1.01.0	12

BITUMINOUS CONCRETE PAVEMENT

TYPICAL CROSS SECTION
NOT TO SCALE

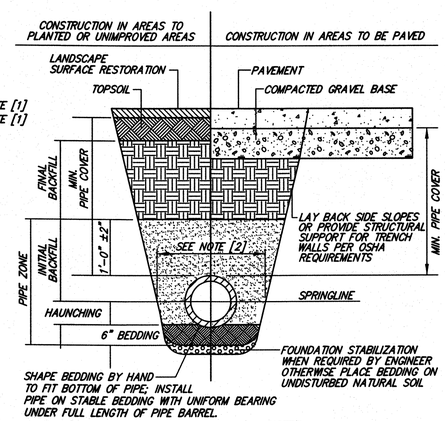

FOUNDATION, BEDDING, & BACKFILL MATERIALS		
PIPE MATERIAL	HDP, PVC	RC, DI
FOUNDATION STABILIZATION	[6]	[6]
BEDDING	[1]	[1]
HAUNCHING	[1]	[1]
INITIAL BACKFILL	[1]	[1]
FINAL BACKFILL	[4]	[4]
MIN. PIPE COVER	[5]	[5]

NOTES:
[1] PLACE 3/4"± GRADED GRANULAR BACKFILL AT OPTIMUM MOISTURE IN HORIZONTAL, 8"-DEEP, LOOSE LAYERS; COMPACT TO 95% PER ASTM D-1557.
[2] MINIMUM WIDTH OF TRENCH MEASURED AT THE SPRINGLINE OF THE PIPE, INCLUDING ANY NECESSARY SHEATHING:

PIPE I.D.	WIDTH
LESS THAN 21"	O.D. + 12"
21" TO 42"	O.D. + 24"
GREATER THAN 42"	O.D. + 30"

[3] INSTALL PIPE IN CENTER OF TRENCH.
[4] IN PLANTED OR UNIMPROVED AREAS, USE ON-SITE EXCAVATED MATERIAL FOR FINAL BACKFILL. COMPACT TO 95% PER ASTM D-1557. IN PAVED AREAS, OBTAIN ENGINEER APROVAL OF ON-SITE EXCAVATED MATERIALS FOR USE AS FINAL BACKFILL.
[5] MINIMUM COVER OVER TOP OF PIPE:

PIPE MATERIAL	HDP, PVC	RC, DI
WATER	5'-0"	5'-0"
SEWER	4'-0"	4'-0"
DRAIN	1'-6"	1'-0"

[6] FOR FOUNDATION STABILIZATION, USE 2"± CRUSHED STONE.

PIPE TRENCH

TYPICAL CROSS SECTION
NOT TO SCALE

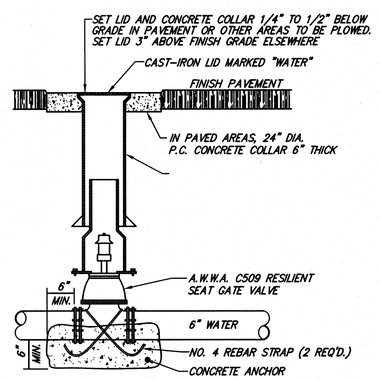

VALVE BOX

TYPICAL CROSS SECTION

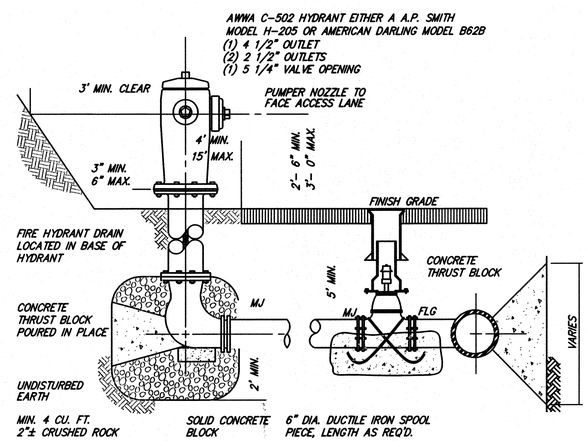

FIRE HYDRANT ASSEMBLY

TYPICAL CROSS SECTION
NOT TO SCALE

PROJECT NAME:
WENHAM PINES
56 & 60 Main Street
Wenham, MA 01984

APPLICANT:
WENHAM PINES LLC.
6 Kimball Lane
Lynnfield, MA 01940

OWNER:
ESTATE OF WILLIAM J. FLYNN
5 Barker Road
Boxford, MA 01921

HANCOCK ASSOCIATES
Civil Engineers
Land Surveyors
Wetland Scientists
185 CENTRE STREET, DANVERS, MA 01923
VOICE (978) 777-3050, FAX (978) 774-7816
WWW.HANCOCKASSOCIATES.COM

COMMONWEALTH OF MASSACHUSETTS
RICHARD A. HANCOCK
CIVIL
No. 34026
REGISTERED PROFESSIONAL ENGINEER
7/20/16

NO.	BY	APP	DATE	ISSUE/REVISION DESCRIPTION

DATE:	7/19/2016	DESIGN BY:	RAT
SCALE:	AS SHOWN	DRAWN BY:	RD
APPRVD. BY:	VVT	CHECK BY:	RAT

SITE DETAILS 1

PLOT DATE: Jul 20, 2016 8:13 am
PATH: F:\Civil 3D Projects\19400\DWG\

DWG: 19400C1 160708.dwg
LAYOUT: DETAILS1
SHEET: 24 OF 34

SD-1

PROJECT NO.: 19400

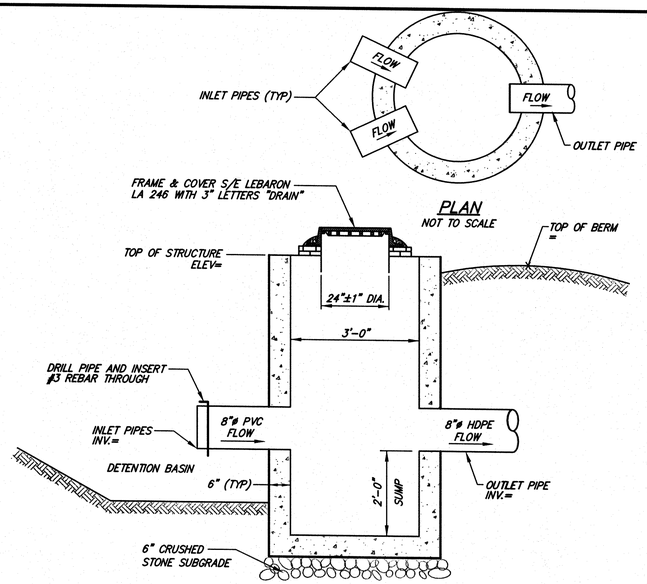

OUTLET CONTROL STRUCTURE

NOT TO SCALE

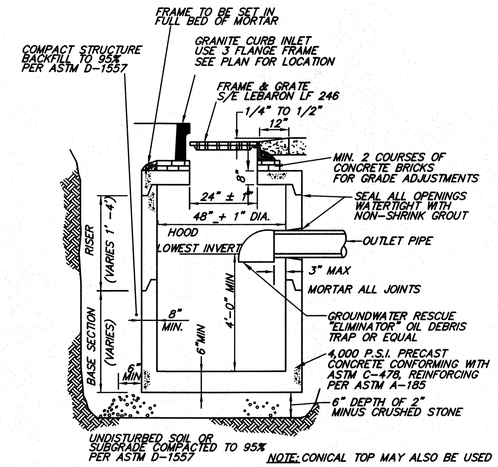

CATCH BASIN

TYPICAL CROSS SECTION
NOT TO SCALE

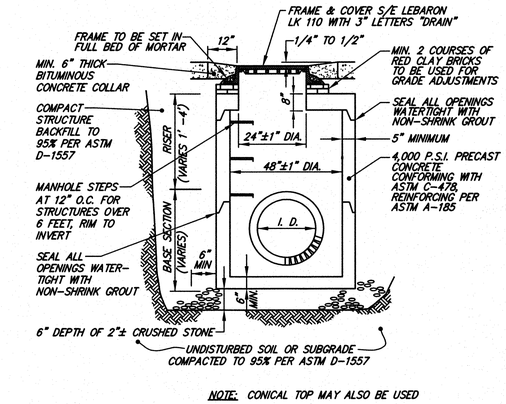

DRAIN MANHOLE

TYPICAL CROSS SECTION
NOT TO SCALE

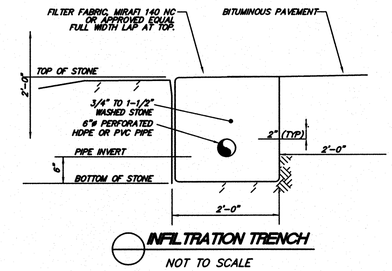

INFILTRATION TRENCH

NOT TO SCALE

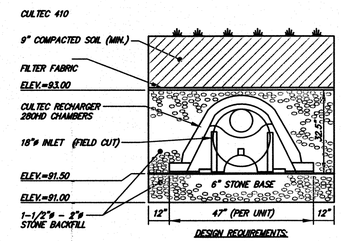

DESIGN REQUIREMENTS:
3 UNITS (4' x 21')
1 ROW OF 3 UNITS
OUTSIDE STONE DIMENSIONS = 6' x 24'

ROOF DRAIN INFILTRATION SYSTEM

NOT TO SCALE

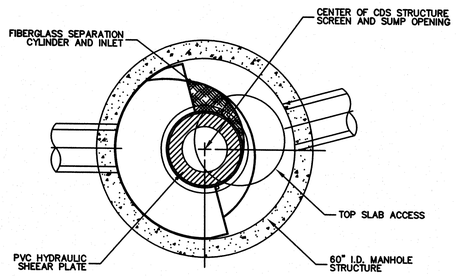

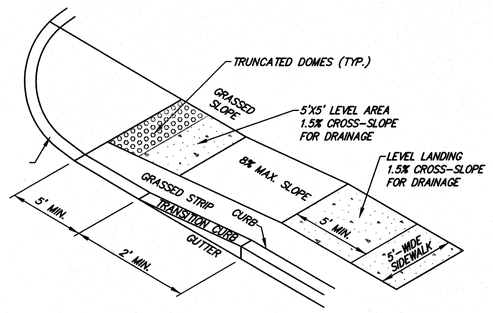

HANDICAP RAMP ISOMETRIC VIEW

NOT TO SCALE

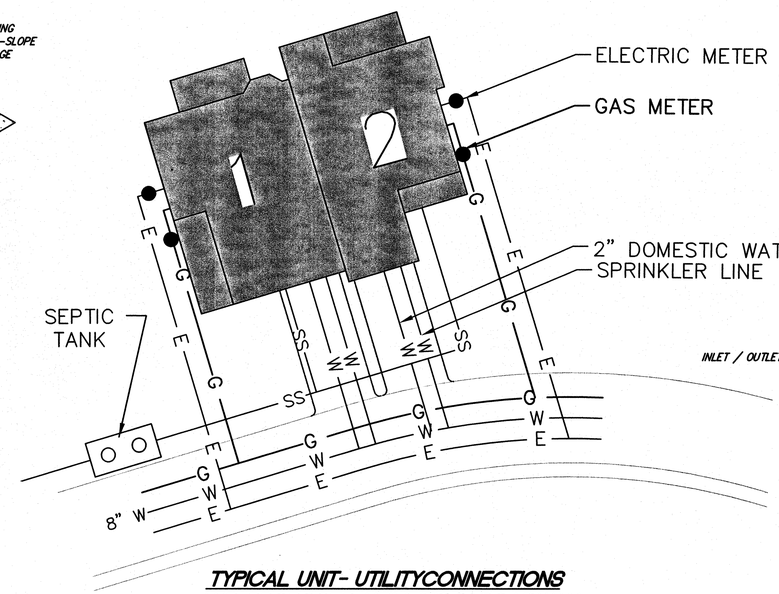

TYPICAL UNIT- UTILITYCONNECTIONS AND PROPOSED UTILITIES IN ROADWAY

NOT TO SCALE

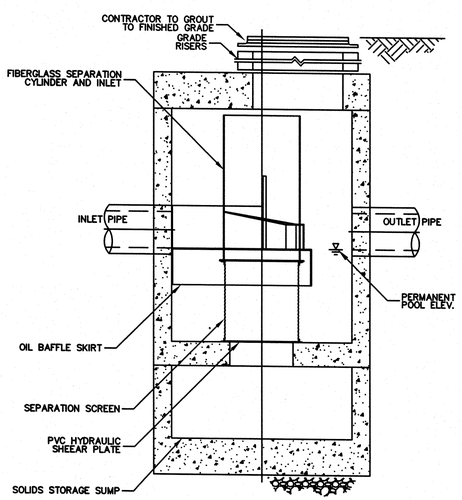

CONTECH/STORMWATER SOLUTIONS

NOT TO SCALE

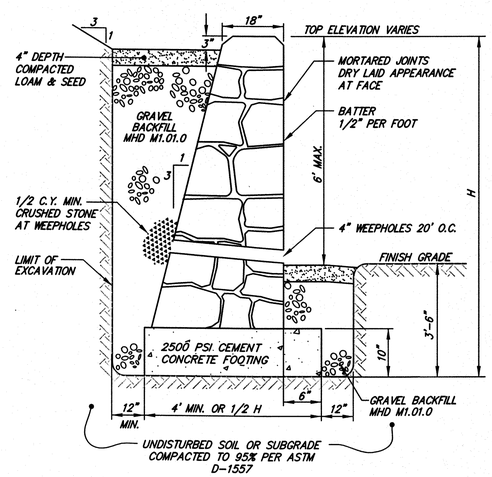

FIELDSTONE RETAINING WALL

CROSS SECTION
NOT TO SCALE

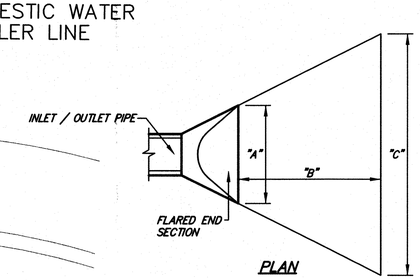

PLAN

DIMENSION	12" D-BASIN INLET
"A"	36"
"B"	14'
"C"	15'
LARGEST STONE	6"
APRON DEPTH	10"

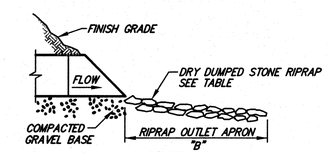

SECTION

DRAIN OUTLET AND APRON

TYPICAL CROSS SECTION
NOT TO SCALE

PROJECT NAME:

WENHAM PINES

56 & 60 Main Street
Wenham, MA 01984

APPLICANT:

WENHAM PINES LLC.

6 Kimball Lane
Lynnfield, MA 01940

OWNER:

ESTATE OF WILLIAM J. FLYNN

5 Barker Road
Boxford, MA 01921

HANCOCK ASSOCIATES

Civil Engineers

Land Surveyors

Wetland Scientists

185 CENTRE STREET, DANVERS, MA 01923
VOICE (978) 777-3050, FAX (978) 774-7816
WWW.HANCOCKASSOCIATES.COM

COMMONWEALTH OF MASSACHUSETTS
RICHARD A. TAUSKO
CIVIL
No. 34026
REGISTERED PROFESSIONAL ENGINEER
7/20/16

NO.	BY	APP	DATE	ISSUE/REVISION DESCRIPTION

DATE:	7/19/2016	DESIGN BY:	RAT
SCALE:	AS SHOWN	DRAWN BY:	RD
APPRVD. BY:	VVT	CHECK BY:	RAT

SITE DETAILS 2

PLOT DATE: Jul 20, 2016 8:17 am
PATH: F:\Civil 3D Projects\19400\DWG\

DWG:	19400C1 16070B.dwg
LAYOUT:	DETAILS2
SHEET:	25 OF 34
PROJECT NO.:	19400

SD-2

SOIL TEST DATA

PERC TEST	DEPTH BELOW GRADE @ 12" LEVEL (IN.)	EL. @ 12" LEVEL	FIELD RATE (MIN/IN.)	DATE
P-1-16	27"	52.95	1.67	5-4-16
P-2-16	48"	51.80	N/A	5-4-16
P-3-16	24"	53.00	N/A	5-4-16
P-5-16	24"	54.00	1.33	5-4-16
P-10-16	36"	54.30	1.67	5-4-16
P-11-16	24"	53.00	0.67	5-4-16
P-12-16	42"	51.00	0.33	5-4-16
P-13-16	29"	52.60	<2	5-4-16

EVALUATOR: VACLAV V. TALACKO
WITNESS: GREG BERNARD BOH

DEEP SOIL OBS. HOLE	T-1-16	T-2-16	T-3-16	T-4-16	T-5-16	T-6-16	T-7-16
DATE	5/4/16	5/4/16	5/4/16	5/4/16	5/4/16	5/4/16	5/4/16
GRADE EL.	55.2	55.8	55.0	54.9	56.0	56.3	56.0
ESHGW EL.	49.2	47.0	47.5	44.9	46.0	46.3	46.0
OBS. GW EL.	–	48.0	45.0	–	–	–	–
BOTTOM EL.	44.7	44.9	42.3	42.4	43.2	43.2	43.1

DEEP SOIL OBS. HOLE	T-8-16	T-9-16	T-10-16	T-11-16	T-12-16	T-13-16	T-14-16
DATE	5/4/16	5/4/16	5/4/16	5/4/16	5/4/16	5/4/16	5/4/16
GRADE EL.	41.3	54.9	57.3	55.0	54.5	55.0	44.8
ESHGW EL.	31.2	46.3	49.3	47.2	46.9	49.1	34.7
OBS. GW EL.	–	44.7	–	–	46.2	–	–
BOTTOM EL.	31.3	44.7	46.1	44.3	43.3	45.0	34.6

T-1-16
0-12" A SANDY LOAM 10YR3/3 FRIABLE, LOOSE
12-24" Bw LOAMY SAND 10YR5/6 FRIABLE, LOOSE
24-36" C1 M-FLS 10Y6/6 MASSIVE, LOOSE
36-126" C2 M-FS 10Y5/6 MASSIVE, LOOSE
OBSERVED GROUNDWATER @ 80"
NO REFUSAL

T-2-16
0-16" A SANDY LOAM 10YR3/3 FRIABLE
16-30" Bw SANDY LOAM 10YR5/6 FRIABLE
30-42" C1 M-FS 10Y5/6 MASSIVE, LOOSE
42-47" C2 FINE LOAMY SAND 10Y5/3 MASSIVE, LOOSE
47-92" C3 MFS 10Y5/6 MASSIVE, LOOSE
92-130" C4 MS 2.5Y MASSIVE, LOOSE, COBBLES
MOTTLING @ 77" 10YR6/8, 5Y7/1
OBSERVED GROUNDWATER @ 92"
NO REFUSAL

T-3-16
0-12" A LOAMY SAND 10YR3/3 FRIABLE, LOOSE
12-20" Bw GRAVELLY LOAMY SAND 10YR5/6 FRIABLE, LOOSE
20-91" C1 FMS 10Y4/6 MASSIVE, LOOSE
91-153" C2 FMS 10Y5/4 MASSIVE, LOOSE
153" C3 M-CS COARSE MASSIVE, LOOSE, COBBLES
MOTTLING @ 90" 10YR6/8, 5Y7/1
OBSERVED GROUNDWATER @ 116"
NO REFUSAL

T-4-16
0-11" A LOAMY SAND 10YR3/3 FRIABLE
11-20" Bw LOAMY SAND 10YR5/6 FRIABLE
20-90" C1 M-FS 7.5Y5/6 LOOSE, COBBLES
90-150' C2 M-FLS 10YR6/3 MASSIVE, LOOSE
MOTTLING @ 120" 10YR6/8, 5Y7/2
OBSERVED GROUNDWATER @ 148"
WEEPING @ 135"
NO REFUSAL

T-5-16
0-10" A SANDY LOAM 10YR3/4 FRIABLE, LOOSE
10-19" Bw LOAMY SAND 10YR6/6 FRIABLE
19-70" C1 GRAVELLY LOAMY SAND 10Y4/4 MASSIVE, LOOSE
70-154" C2 LOAMY SAND 10Y6/3 MASSIVE, LOOSE
OBSERVED GROUNDWATER @ 145"
WEEPING @ 135"
DEPTH ADJ. SEASONAL GROUNDWATER @ 120"

T-6-16
0-9" A SANDY LOAM 10YR3/4 FRIABLE
9-20" Bw LOAMY SAND 10YR6/6 FRIABLE
20-95" C1 M-FS 10Y4/4 MASSIVE, LOOSE
95-157" C2 M-FS 10Y6/6 MASSIVE, LOOSE
OBSERVED GROUNDWATER @ 152"
WEEPING @ 124"
DEPTH ADJ. SEASONAL GROUNDWATER @ 120"

T-7-16
0-9" A SANDY LOAM 10YR3/4 FRIABLE, LOOSE
9-20" Bw SANDY LOAM 10YR6/6 FRIABLE, LOOSE
20-30" C1 FINE SANDY LOAM 10Y5/6 MASSIVE
30-90" C2 LMS 10Y5/4 MASSIVE, FIRM
90-155" C3 M-FLS 10Y6/3 MASSIVE
MOTTLING @ 120" 10YR6/8, 5Y7/1
OBSERVED GROUNDWATER @ 148"
WEEPING @ 138"

T-8-16
0-12" A SANDY LOAM 10YR3/4 FRIABLE
12-20" Bw LOAMY SAND 10YR6/5 FRIABLE
20-96" C1 F-MS 10Y5/4 MASSIVE, LOOSE
96-120" C2 SANDY LOAM 10Y6/3
OBSERVED GROUNDWATER @ 90"
NO REFUSAL

T-9-16
0-10" A SANDY LOAM 10YR3/3 FRIABLE
10-20" Bw SANDY LOAM 10YR5/6 FRIABLE
20-40" C1 LOAMY SAND 10Y5/6 MASSIVE, LOOSE
40-95" C2 FINE LOAMY SAND 7Y5/6 MASSIVE
95-122" C3 F-MS 7Y5/6 MASSIVE, LOOSE
MOTTLING @ 103" 10YR6/8, 5Y7/1
OBSERVED GROUNDWATER @ 107"
WEEPING @ 103"

T-10-16
0-8" A LOAMY SAND 10YR3/4 FRIABLE
8-26" Bw LOAMY SAND 10YR6/8 FRIABLE
26-134" C1 FMS 10Y4/4 MASSIVE, LOOSE
MOTTLING @ 96" 10YR6/8, 5Y7/1
OBSERVED GROUNDWATER @ 96"
WEEPING @ 112"

T-11-16
0-12" A LOAM 10YR3/4 FRIABLE
12-28" Bw LOAMY SAND 10YR6/8 FRIABLE
28-94" C1 F-MS 2.5Y6/4 LOOSE
94-128" C2 F-MS 10YR4/4 COBBLES
MOTTLING @ 94" 10YR6/8, 5Y7/2
OBSERVED GROUNDWATER @ 94"
WEEPING @ 94"

T-12-16
0-10" A SANDY LOAM 10YR3/4 FRIABLE
20-110" Bw SANDY LOAM 10YR6/6 FRIABLE
110-134" C1 F-MS 2.5Y6/4 MASSIVE, LOOSE, COBBLES
MOTTLING @ 91" 10YR6/8, 5Y7/2
OBSERVED GROUNDWATER @ 100"
WEEPING @ 110"

T-13-16
0-8" A LOAM 10YR3/4 FRIABLE
8-24" Bw LOAMY SAND 10YR6/6 FRIABLE
24-43" C1 FMS 10Y5/6 LOOSE, MASSIVE
43-70" C2 FMS 10Y6/6 LOOSE, MASSIVE
70-120" C3 SANDY LOAM 10Y5/4 FIRM, COBBLES
MOTTLING @ 70" 10YR6/8, 5Y7/1
NO OBSERVED GROUNDWATER
NO REFUSAL

T-14-16
0-8" A SANDY LOAM 10YR3/4 FRIABLE
8-28" Bw SANDY LOAM 10YR6/6 FRIABLE
28-60" C1 F-MS 10Y4/4 FRIABLE, LOOSE
60-122" C2 GRAVELLY FINE SAND 10Y4/4 LOOSE, COBBLES
OBSERVED GROUNDWATER @ 121"
NO REFUSAL

PROJECT NAME:
WENHAM PINES
56 & 60 Main Street
Wenham, MA 01984

APPLICANT:
WENHAM PINES LLC.
6 Kimball Lane
Lynnfield, MA 01940

OWNER:
ESTATE OF WILLIAM J. FLYNN
5 Barker Road
Boxford, MA 01921

HANCOCK ASSOCIATES
Civil Engineers
Land Surveyors
Wetland Scientists
185 CENTRE STREET, DANVERS, MA 01923
VOICE (978) 777-3050, FAX (978) 774-7816
WWW.HANCOCKASSOCIATES.COM

COMMONWEALTH OF MASSACHUSETTS
VACLAV V. TALACKO
No. 34026
REGISTERED PROFESSIONAL ENGINEER
7/19/16

NO.	BY	APP	DATE	ISSUE/REVISION DESCRIPTION

DATE:	7/19/2016	DESIGN BY:	VVT
SCALE:		DRAWN BY:	TRD
APPRVD. BY:	RAT	CHECK BY:	VVT

TEST PIT LOG

PLOT DATE: Jul 20, 2016 10:59 am
PATH: F:\Civil 3D Projects\19400\DWG\

DWG: 19400C1 1607CB.dwg
LAYOUT: TEST PIT LOG
SHEET: 26 OF 34

TP-1

PROJECT NO.: 19400

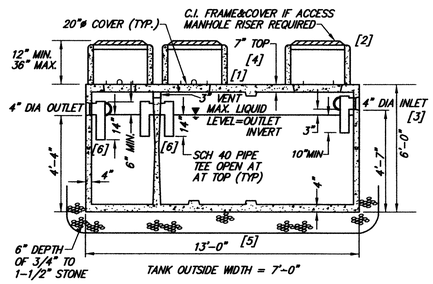

[1] PRECAST REINFORCED CONCRETE CONSTRUCTION, LOAD RATING: H10 FULLY DAMP-PROOFED EXTERIOR, ALL OPENINGS SEALED WATERTIGHT. AS MANUFACTURED BY E.F. SHEA OF WILMINGTON, MA., OR EQUAL.

[2] MANHOLE RISER REQUIRED: YES NO
IF YES, APPROX. DEPTH OF COVER OVER RISER RIM: 0 INCHES

[3] IF SIDE INLET OF SEPTIC TANK IS USED, EXTEND INLET PIPE TO CENTER OF TANK.

[4] WHERE UNDER OR ADJACENT TO AREA TO BE PAVED, COMPACT BACKFILL TO 95% PER ASTM D-1557.

[5] UNDISTURBED SOIL OR SUBGRADE COMPACTED TO 95% PER ASTM D-1557.

[6] OUTLET TEES SHALL BE EQUIPPED WITH A CORROSION-RESISTANT GAS DEFLECTOR.

[7] INSTALL EFFLUENT FILTER A-1800 OR EQUAL. MANHOLE OVER FILTER SHALL BE BE LABELED "FILTER".

1340/660 GAL. MONOLITHIC SEPTIC TANK

(310 CMR 15.223 – 15.227)
TYPICAL CROSS SECTION
NOT TO SCALE

1. FIRST COMPARTMENT : 200% DAILY FLOW = 1340 GAL.
2. SECOND COMPARTMENT : 100% DAILY FLOW = 660 GAL.
3. REQUIRED: 1340/660 GAL., 2 COMPARTMENT TANK

SEPTIC TANK COMPUTATIONS

(310 CMR 15.223)

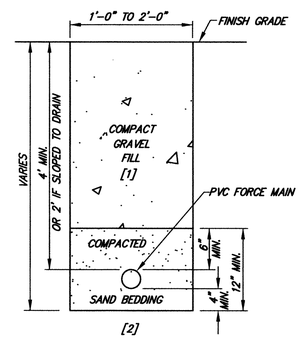

[1] WHERE UNDER OR ADJACENT AREA TO BE PAVED, COMPACT BACKFILL TO 95% PER ASTM D-1557.

[2] UNDISTURBED SOIL OR SUBGRADE COMPACTED TO 95% PER ASTM D-1557.

FORCE MAIN TRENCH

TYPICAL CROSS SECTION
NOT TO SCALE

PROJECT NAME:

WENHAM PINES

56 & 60 Main Street
Wenham, MA 01984

APPLICANT:

WENHAM PINES LLC.

6 Kimball Lane
Lynnfield, MA 01940

OWNER:

ESTATE OF WILLIAM J. FLYNN

5 Barker Road
Boxford, MA 01921

HANCOCK ASSOCIATES

Civil Engineers

Land Surveyors

Wetland Scientists

185 CENTRE STREET, DANVERS, MA 01923
VOICE (978) 777-3050, FAX (978) 774-7816
WWW.HANCOCKASSOCIATES.COM

COMMONWEALTH OF MASSACHUSETTS
VAGUAY V. VALACKO
No. 34026
REGISTERED PROFESSIONAL ENGINEER
7/20/16

NO.	BY	APP	DATE	ISSUE/REVISION DESCRIPTION

DATE:	6/29/2016	DESIGN BY:	VVT
SCALE:	NONE	DRAWN BY:	TRD
APPRVD. BY:	RAT	CHECK BY:	

SEWER AND SEPTIC DETAILS

PLOT DATE: Jul 20, 2016 10:59 am
PATH: F:\Civil 3D Projects\19400\DWG\

DWG: 19400C1 1607CB.dwg
LAYOUT:DETAILS-SEPTIC
SHEET: 27 OF 34

S+SD

PROJECT NO.: 19400

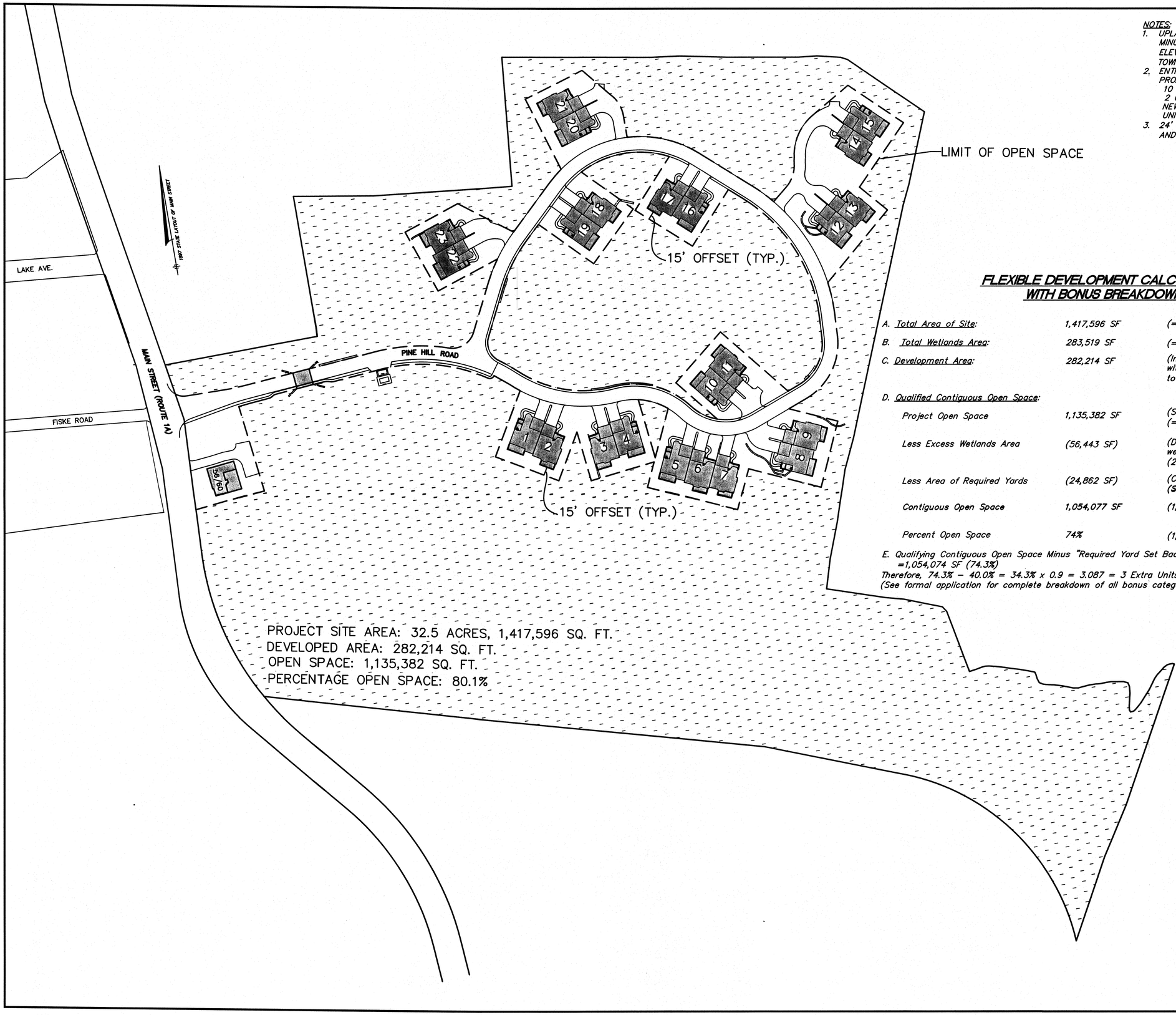

NOTES:
1. UPLAND AREA CALCULATED AS TOTAL LOT AREA MINUS AREA OF LOT BELOW FLOODPLAIN ELEVATION (ELEV. 39) (ZONING BY-LAWS OF THE TOWN OF WENHAM §5.2.2)
2. ENTIRE PARCEL: 32.5± ACRES
   PROPOSED UNITS: 23+2 AFFORDABLE UNITS=25
   10 NEWLY CONSTRUCTED BUILDINGS
   2 UNITS IN EACH BUILDING AND 1 NEWLY CONSTRUCTED BUILDING WITH 3 UNITS
3. 24' ROADWAY W/ CAPE COD BERM AND 4.5' BITUMINOUS CONCRETE SIDEWALK

FLEXIBLE DEVELOPMENT CALCULATION WITH BONUS BREAKDOWN

A. Total Area of Site:	1,417,596 SF	(= 32.4 acres)
B. Total Wetlands Area:	283,519 SF	(= 20% of Total Area)
C. Development Area:	282,214 SF	(Includes calculated area of land to be developed with roadway, driveways, buildings and areas to be maintained as exclusive use yards)
D. Qualified Contiguous Open Space:		
Project Open Space	1,135,382 SF	(Site Area – Development Area) (= 80% of site or about 26 acres)
Less Excess Wetlands Area	(56,443 SF)	(Difference between total site wetlands and 20% wetland area allowed (227,076 SF) – see Section 11.1.5.1)
Less Area of Required Yards	(24,862 SF)	(Calculated area of land within required yards) **(See Section 11.1.2)**
Contiguous Open Space	1,054,077 SF	(1,135,382 SF – 56,443 SF – 24,862 SF)
Percent Open Space	74%	(1,054,077/1,417,596)

E. Qualifying Contiguous Open Space Minus "Required Yard Set Backs"(24,864 SF) =1,054,074 SF (74.3%)
Therefore, 74.3% – 40.0% = 34.3% x 0.9 = 3.087 = 3 Extra Units (Rounding Down)
(See formal application for complete breakdown of all bonus categories)

PROJECT NAME:
WENHAM PINES
56 & 60 Main Street
Wenham, MA 01984

APPLICANT:
WENHAM PINES LLC.
6 Kimball Lane
Lynnfield, MA 01940

OWNER:
ESTATE OF WILLIAM J. FLYNN
5 Barker Road
Boxford, MA 01921

HANCOCK ASSOCIATES
Civil Engineers
Land Surveyors
Wetland Scientists
185 CENTRE STREET, DANVERS, MA 01923
VOICE (978) 777-3050, FAX (978) 774-7816
WWW.HANCOCKASSOCIATES.COM

COMMONWEALTH OF MASSACHUSETTS
WALLACE A. HANCOCK
No. 34026
REGISTERED PROFESSIONAL ENGINEER
7/20/16

NO.	BY	APP	DATE	ISSUE/REVISION DESCRIPTION

DATE:	7/19/2016	DESIGN BY:	RAT
SCALE:	1"=80'	DRAWN BY:	JPC
APPRVD. BY:	VVT	CHECK BY:	RAT

OPEN SPACE PLAN

PLOT DATE: Jul 20, 2016 10:16 am
PATH: F:\Civil 3D Projects\19400\DWG\

DWG: 19400C1 Open Space Calcs.dwg
LAYOUT: OPEN SPACE
SHEET: 28 OF 34
OS
PROJECT NO.: 19400

OPEN SPACE

OPEN SPACE

OPEN SPACE

DEVELOPMENT AREA

DEVELOPMENT AREA

500'

32.4 ± ACRES

TARR REALTY TRUST

HISTORIC DISTRICT

TOWN OF WENHAM

DETAIL
NO SCALE

ALICE SEWALL
PL. 16 OF 1980

30' PRIVATE WAY

WENHAM LAKE (RESERVOIR)

MAIN STREET

(1897 STATE LAYOUT & 1932 ALTERATION) (VARIABLE WIDTH)

APPROX. 36" WATER MAIN (SEE NOTE #1)

100' BUFFER ZONE

SEE EASEMENTS RELATING TO WATER LINE:
BK. 1435 PG. 25
BK. 1457 PG. 201
PL. BK. 136 PL. 78

AQUIFER PROTECTION DISTRICT

HISTORIC DISTRICT

ERNEST M. & SUSAN K. SANTIN
LOT 1A PL. BK. 376 PL. 45

ROBERT A. & HOPE A. BATCHELDER

MASSACHUSETTS BAY TRANSPORTATION AUTHORITY

(SURVEY TIE LINE)
S 82°21'29" E
368.13'

FLOODED AT TIME OF SURVEY

APPROX. LOCATION OF CHANNEL PRIOR TO RELOCATION OF BRIDGE

1897 STATE LAYOUT OF MAIN ST.

I CERTIFY THAT A MINIMUM SETBACK OF 500 FEET HAS BEEN MAINTAINED BETWEEN ROUTE 1A AND ANY OF THE NEW HOMES IN THE PROJECT.

6/23/2016

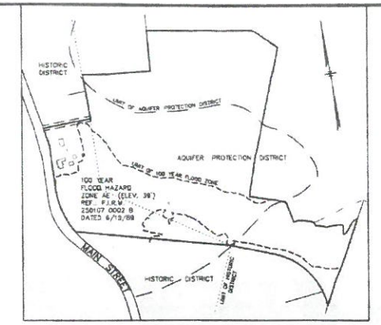

KEY MAP
SCALE: 1" = 250'

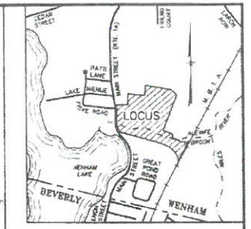

LOCUS MAP
SCALE: 1" = 1000'

ZONING: RESIDENTIAL DISTRICT
(ALSO: HISTORIC DISTRICT & AQUIFER PROTECTION DISTRICT)

ASSESSORS MAP 27
LOTS 36 & 44

REFERENCES:

DEEDS –

BK. 5982 PG. 439
BK. 5982 PG. 444
BK. 5982 PG. 445
BK. 5982 PG. 448

PLANS –

1897 STATE LAYOUT OF MAIN ST.

1932 STATE ALTERATION OF MAIN ST. (PL. BK. 61 PL. 96)

LEGEND & SYMBOLS

	STONE WALL
	GUARD RAIL
	WOOD FENCE
	CHAIN LINK FENCE
OHW	OVERHEAD WIRES
	UTILITY POLE
	UTILITY POLE WITH CABLE ANCHOR
CB	CATCH BASIN
MH	MANHOLE
M.B.	MAILBOX
GV	GAS VALVE
S.T.	SAND TRAP
BIT.	BITUMINOUS
CONC.	CONCRETE
GRAN.	GRANITE
LDG.	LEDGE
CTR.BK.	CENTER BACK
M.H.	MASS. HIGHWAY
S.B.	STONE BOUND
D.H.	DRILL HOLE
I.PIPE	IRON PIPE
I.R.	IRON ROD
SPK.	SPIKE
FD.	FOUND

NOTES:

1. THE LOCATION OF THE 36" WATER MAIN IS APPROXIMATE AS TAKEN FROM PL. BK. 136 PL. 79
2. WETLAND FLAGS BY RIMMER ENVIRONMENTAL CONSULTING, LLC JUNE 2008 (WETLAND FLAGGING HAS NOT BEEN CONFIRMED BY THE WENHAM CONSERVATION COMMISSION AT THIS TIME).
3. UNDERGROUND UTILITIES ARE SHOWN APPROX. AS TAKEN FROM RECORDS OR AS MARKED ON THE GROUND BY OTHERS. THEY ARE NOT WARRANTED TO BE CORRECT OR COMPLETE.
4. VERTICAL DATUM – N.G.V.D., 1929

SCALE: 0 25 50 100 150 200 FEET
0 10 25 50 METERS

12.7.15
rev. 6.14.16 6.24.16

Proposed
Flexible Development
Layout Plan

Prepared by
Hancock Associates

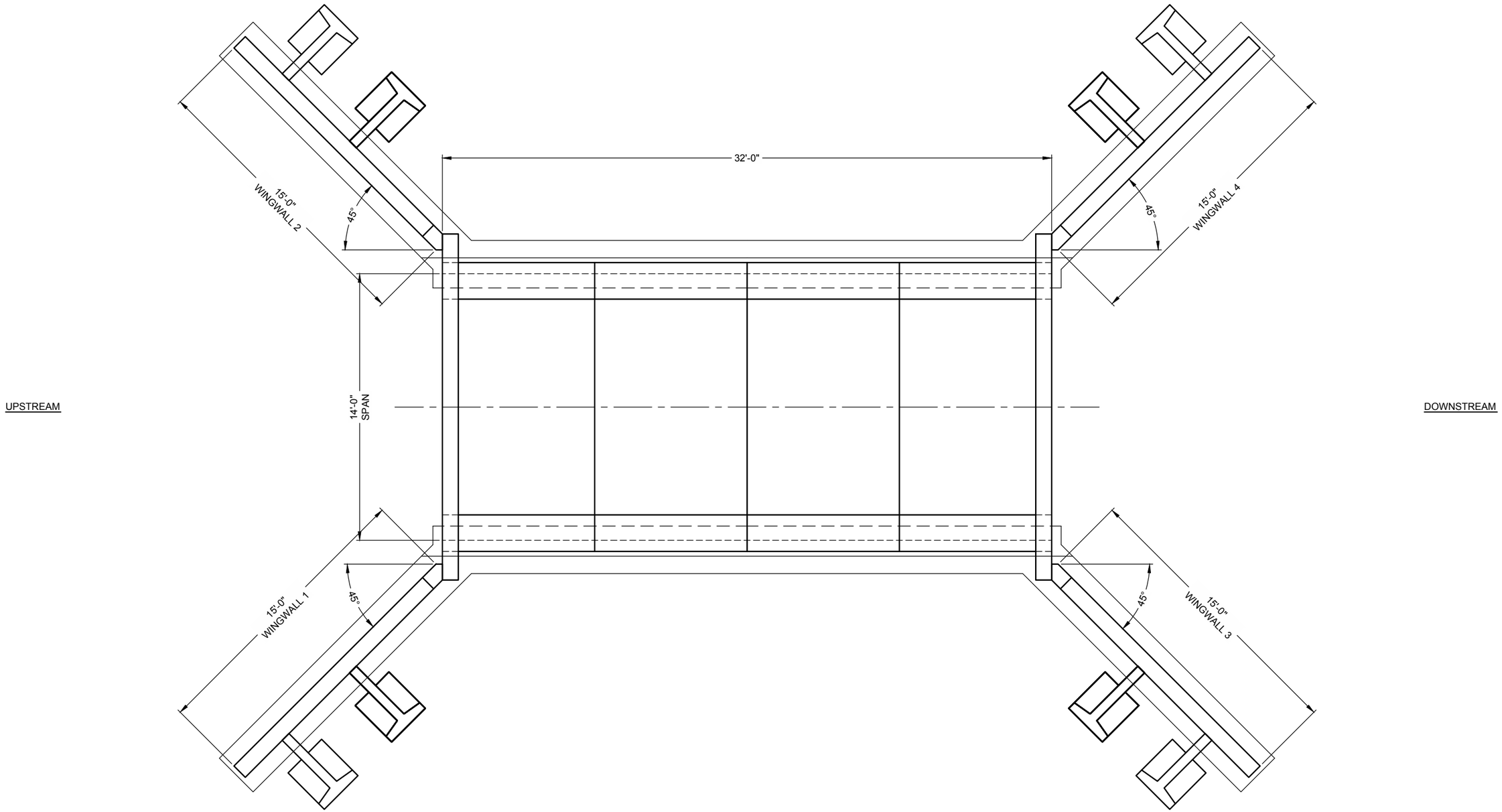

BRIDGE PLAN

The design and information shown on this drawing is provided as a service to the project owner, engineer and contractor by Contech Engineered Solutions LLC ("Contech"). Neither this drawing, nor any part thereof, may be used, reproduced or modified in any manner without the prior written consent of Contech. Failure to comply is done at the user's own risk and Contech expressly disclaims any liability or responsibility for such use.

If discrepancies between the supplied information upon which the drawing is based and actual field conditions are encountered as site work progresses, these discrepancies must be reported to Contech immediately for re-evaluation of the design. Contech accepts no liability for designs based on missing, incomplete or inaccurate information supplied by others.

CONTECH ENGINEERED SOLUTIONS LLC
www.ContechES.com
9025 Centre Pointe Dr., Suite 400, West Chester, OH 45069
800-338-1122 513-645-7000 513-645-7993 FAX

CON/SPAN O-SERIES

CONTECH
DYOB
DRAWING

Wenham Pines
CON/SPAN O-Series O114 14'-0" Span x 4'-1 1/4" Rise
1 Cell - 32' Long
Wenham, Massachusetts

PROJECT No.: 208947	SEQ. No.:	DATE: 5/31/2016
DESIGNED: DYOB	DRAWN: DYOB	
CHECKED: DYOB	APPROVED: DYOB	
SHEET NO.: 1 OF 5		

DRAWING2.DWG 5/31/2016 12:42 PM

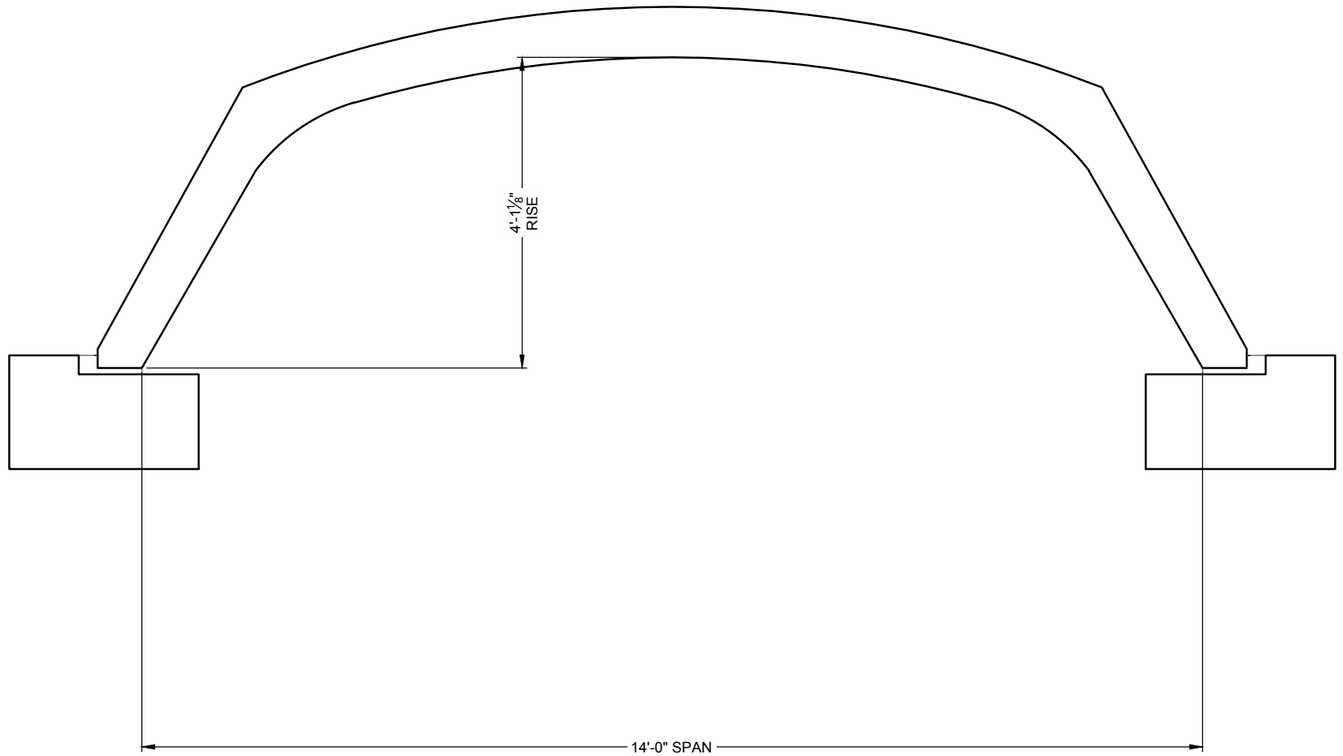

CROSS SECTION

The design and information shown on this drawing is provided as a service to the project owner, engineer and contractor by Contech Engineered Solutions LLC ("Contech"). Neither this drawing, nor any part thereof, may be used, reproduced or modified in any manner without the prior written consent of Contech. Failure to comply is done at the user's own risk and Contech expressly disclaims any liability or responsibility for such use.

If discrepancies between the supplied information upon which the drawing is based and actual field conditions are encountered as site work progresses, these discrepancies must be reported to Contech immediately for re-evaluation of the design. Contech accepts no liability for designs based on missing, incomplete or inaccurate information supplied by others.

CONTECH ENGINEERED SOLUTIONS LLC
www.ContechES.com
9025 Centre Pointe Dr., Suite 400, West Chester, OH 45069
800-338-1122 513-645-7000 513-645-7993 FAX

CON/SPAN O-SERIES
CONTECH
DYOB
DRAWING

Wenham Pines
CON/SPAN O-Series O114 14'-0" Span x 4'-1 1/4" Rise
1 Cell - 32' Long
Wenham, Massachusetts

PROJECT No.: 208947	SEQ. No.:	DATE: 5/31/2016
DESIGNED: DYOB	DRAWN: DYOB	
CHECKED: DYOB	APPROVED: DYOB	
SHEET NO.: 2 OF 5		

DRAWING2.DWG 5/31/2016 12:42 PM

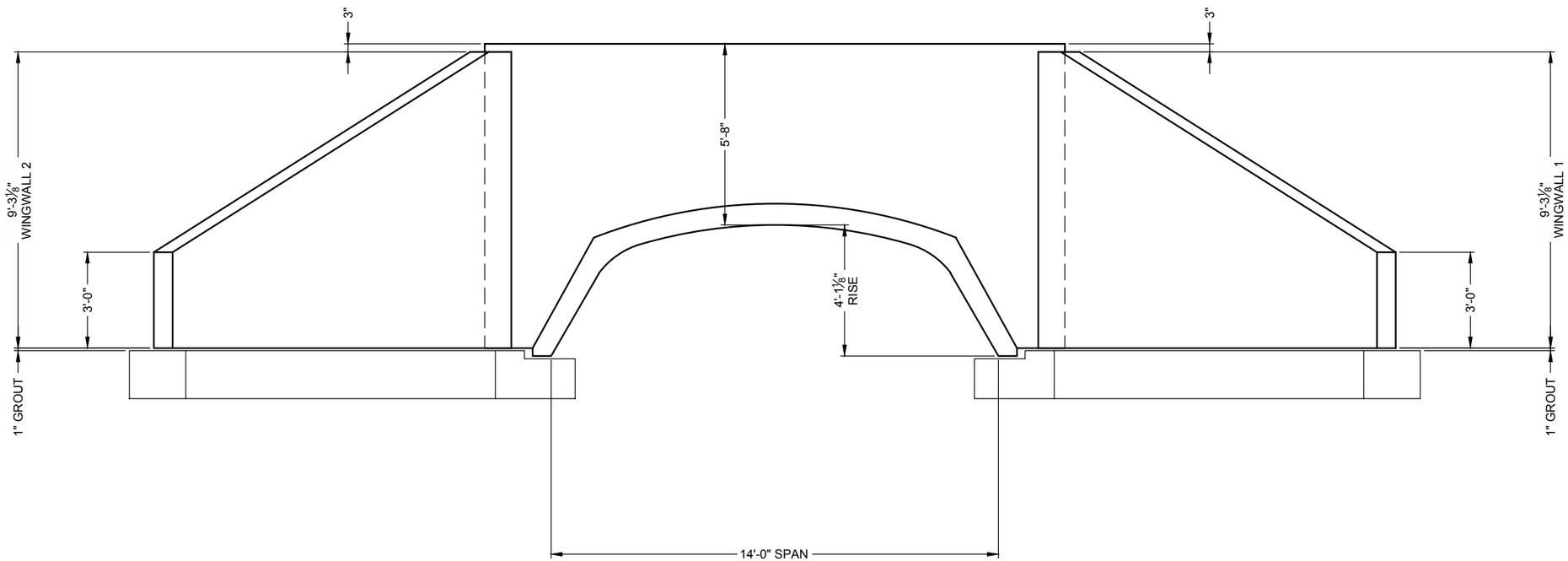

UPSTREAM END ELEVATION

The design and information shown on this drawing is provided as a service to the project owner, engineer and contractor by Contech Engineered Solutions LLC ("Contech"). Neither this drawing, nor any part thereof, may be used, reproduced or modified in any manner without the prior written consent of Contech. Failure to comply is done at the user's own risk and Contech expressly disclaims any liability or responsibility for such use.

If discrepancies between the supplied information upon which the drawing is based and actual field conditions are encountered as site work progresses, these discrepancies must be reported to Contech immediately for re-evaluation of the design. Contech accepts no liability for designs based on missing, incomplete or inaccurate information supplied by others.

CONTECH ENGINEERED SOLUTIONS LLC
www.ContechES.com
9025 Centre Pointe Dr., Suite 400, West Chester, OH 45069
800-338-1122 513-645-7000 513-645-7993 FAX

CON/SPAN O-SERIES
CONTECH
DYOB
DRAWING

Wenham Pines
CON/SPAN O-Series O114 14'-0" Span x 4'-1 1/4" Rise
1 Cell - 32' Long
Wenham, Massachusetts

PROJECT No.: 208947	SEQ. No.:	DATE: 5/31/2016
DESIGNED: DYOB		DRAWN: DYOB
CHECKED: DYOB		APPROVED: DYOB
SHEET NO.: 3 OF 5		

DRAWING2.DWG 5/31/2016 12:42 PM

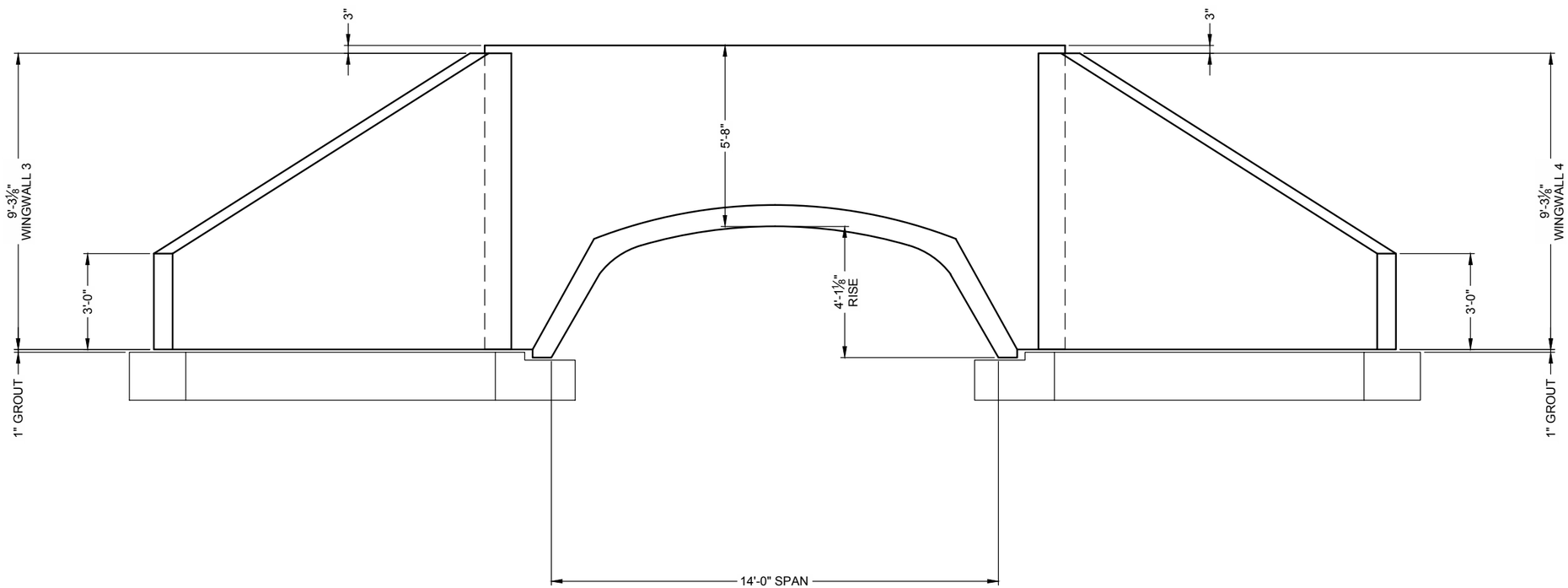

DOWNSTREAM END ELEVATION

The design and information shown on this drawing is provided as a service to the project owner, engineer and contractor by Contech Engineered Solutions LLC ("Contech"). Neither this drawing, nor any part thereof, may be used, reproduced or modified in any manner without the prior written consent of Contech. Failure to comply is done at the user's own risk and Contech expressly disclaims any liability or responsibility for such use.

If discrepancies between the supplied information upon which the drawing is based and actual field conditions are encountered as site work progresses, these discrepancies must be reported to Contech immediately for re-evaluation of the design. Contech accepts no liability for designs based on missing, incomplete or inaccurate information supplied by others.

CONTECH ENGINEERED SOLUTIONS LLC
www.ContechES.com
9025 Centre Pointe Dr., Suite 400, West Chester, OH 45069
800-338-1122 513-645-7000 513-645-7993 FAX

CON/SPAN O-SERIES
CONTECH
DYOB
DRAWING

Wenham Pines
CON/SPAN O-Series O114 14'-0" Span x 4'-1 1/4" Rise
1 Cell - 32' Long
Wenham, Massachusetts

PROJECT No.: 208947	SEQ. No.:	DATE: 5/31/2016
DESIGNED: DYOB		DRAWN: DYOB
CHECKED: DYOB		APPROVED: DYOB
SHEET NO.: 4 OF 5		

DRAWING2.DWG 5/31/2016 12:42 PM

EXPRESS FOUNDATIONS

SAMPLE DRAWING ONLY

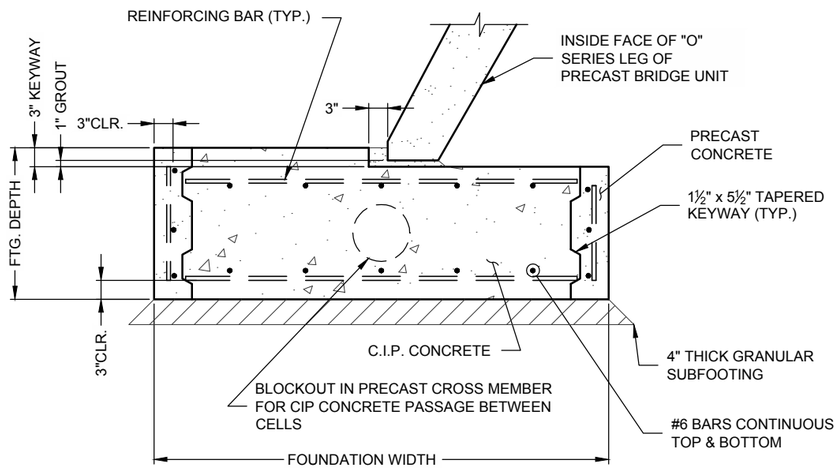

SECTION A
(NOT PROJECT SPECIFIC)

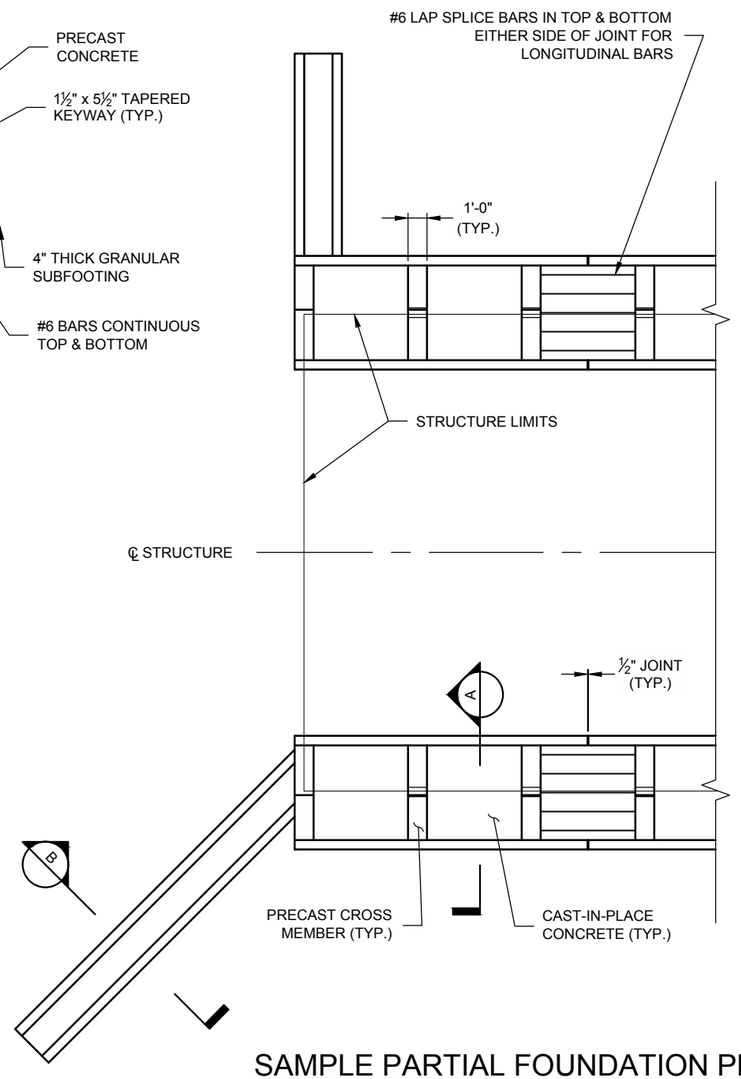

SAMPLE PARTIAL FOUNDATION PLAN
(NOT PROJECT SPECIFIC)

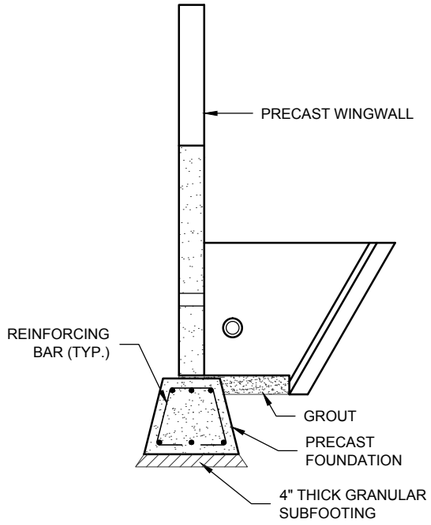

SECTION B
(NOT PROJECT SPECIFIC)

EXPRESS FOUNDATIONS

The design and information shown on this drawing is provided as a service to the project owner, engineer and contractor by Contech Engineered Solutions LLC ("Contech"). Neither this drawing, nor any part thereof, may be used, reproduced or modified in any manner without the prior written consent of Contech. Failure to comply is done at the user's own risk and Contech expressly disclaims any liability or responsibility for such use.

If discrepancies between the supplied information upon which the drawing is based and actual field conditions are encountered as site work progresses, these discrepancies must be reported to Contech immediately for re-evaluation of the design. Contech accepts no liability for designs based on missing, incomplete or inaccurate information supplied by others.

CONTECH ENGINEERED SOLUTIONS LLC
www.ContechES.com
9025 Centre Pointe Dr., Suite 400, West Chester, OH 45069
800-338-1122 513-645-7000 513-645-7993 FAX

CON/SPAN O-SERIES
CONTECH DYOB DRAWING

Wenham Pines
CON/SPAN O-Series O114 14'-0" Span x 4'-1 1/4" Rise
1 Cell - 32' Long
Wenham, Massachusetts

PROJECT No.: 208947	SEQ. No.:	DATE: 5/31/2016
DESIGNED: DYOB	DRAWN: DYOB	
CHECKED: DYOB	APPROVED: DYOB	
SHEET NO.: 5 OF 5		

DRAWING2.DWG 5/31/2016 12:42 PM