ROADWAY PROFILE A

SCALE: AS SHOWN

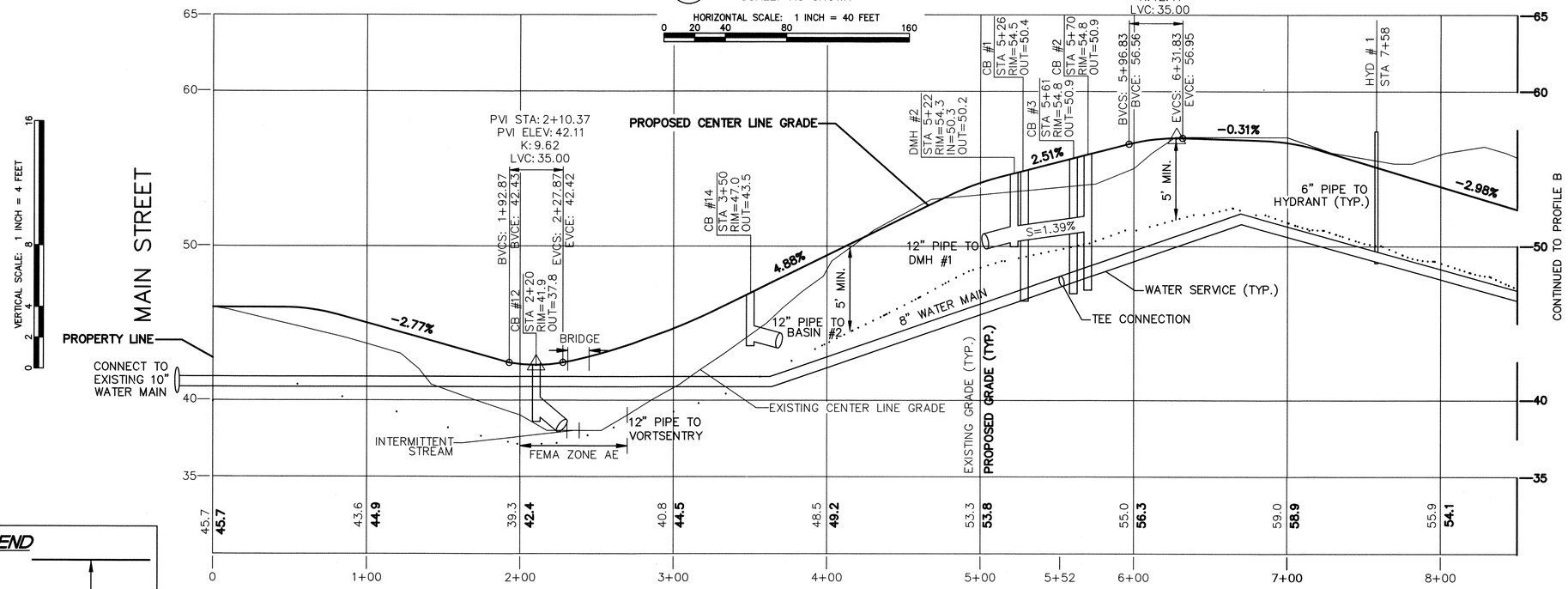

LEGEND

GROUNDCOVER:
5' MIN. FROM FINISHED GRADE

5' MIN.

ROADWAY PROFILE B

SCALE: AS SHOWN

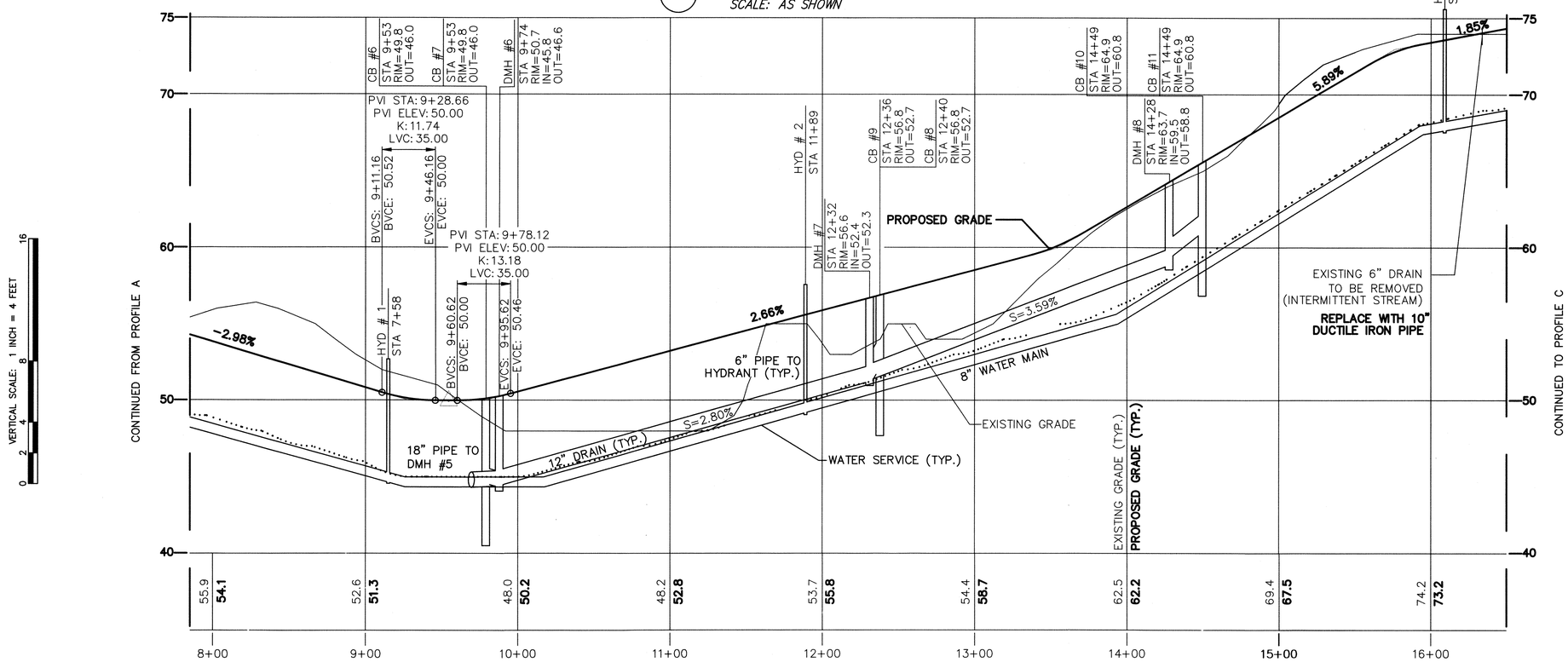

PROJECT NAME:

WENHAM PINES

56-60 Main Street
Wenham, Massachusetts 01984

APPLICANT:

WENHAM PINES LLC

6 Kimball Lane
Lynnfield, Massachusetts 01940

OWNER:

ESTATE OF WILLIAM J. FLYNN

HANCOCK ASSOCIATES

Civil Engineers
Land Surveyors
Wetland Scientists

185 CENTRE STREET, DANVERS, MA 01923
VOICE (978) 777-3050, FAX (978) 774-7816
WWW.HANCOCKASSOCIATES.COM

COMMONWEALTH OF MASSACHUSETTS
VACLAV V. TALACKO
CIVIL
No. 34026
REGISTERED PROFESSIONAL ENGINEER
10/7/16

NO.	BY	APP	DATE	ISSUE/REVISION DESCRIPTION
1	JPC	RAT	10/5/16	PLANNING BOARD COMMENTS

DATE:	7/19/2016	DESIGN BY:	RAT
SCALE:	AS SHOWN	DRAWN BY:	JJP
APPRVD. BY:	VVT	CHECK BY:	RAT

PINE HILL ROADWAY AND UTILITY PROFILE

PLOT DATE: Oct 10, 2016 6:24 pm
PATH: F:\Civil 3D Projects\19400\DWG\

DWG: 19400 Road Profile 7-716.dwg
LAYOUT: PROFILE
SHEET: 18 OF 36

PR-1

PROJECT NO.: 19400

ROADWAY PROFILE C

SCALE: AS SHOWN

HORIZONTAL SCALE: 1 INCH = 40 FEET

0 20 40 80 160

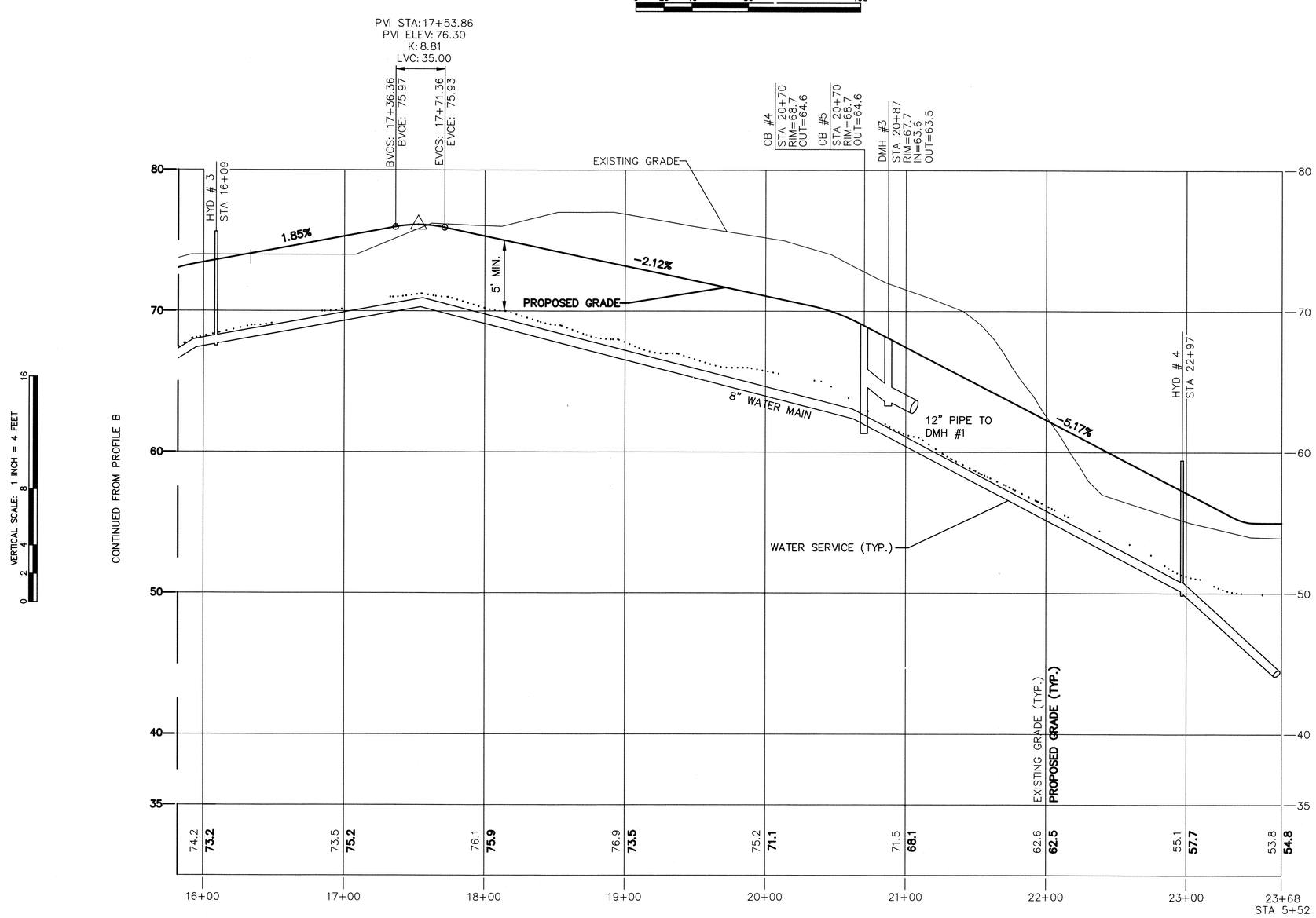

PROJECT NAME:

WENHAM PINES

56-60 Main Street
Wenham, Massachusetts 01984

APPLICANT:

WENHAM PINES LLC

6 Kimball Lane
Lynnfield, Massachusetts 01940

OWNER:

ESTATE OF WILLIAM J. FLYNN

HANCOCK ASSOCIATES

Civil Engineers

Land Surveyors

Wetland Scientists

185 CENTRE STREET, DANVERS, MA 01923
VOICE (978) 777-3050, FAX (978) 774-7816
WWW.HANCOCKASSOCIATES.COM

COMMONWEALTH OF MASSACHUSETTS
VACLAV V. TALACKO
CIVIL
No. 34095
REGISTERED PROFESSIONAL ENGINEER

10/7/16

NO.	BY	APP	DATE	ISSUE/REVISION DESCRIPTION
1	JPC	RAT	10/5/16	PLANNING BOARD COMMENTS

DATE:	7/19/2016	DESIGN BY:	RAT
SCALE:	AS SHOWN	DRAWN BY:	JJP
APPRVD. BY:	VVT	CHECK BY:	RAT

PINE HILL ROADWAY AND UTILITY PROFILE

PLOT DATE: Oct 10, 2016 6:25 pm
PATH: F:\Civil 3D Projects\19400\DWG\

DWG: 19400 Road Profile 7-716.dwg
LAYOUT: PROFILE
SHEET: 19 OF 36

PR-2

PROJECT NO.: 19400

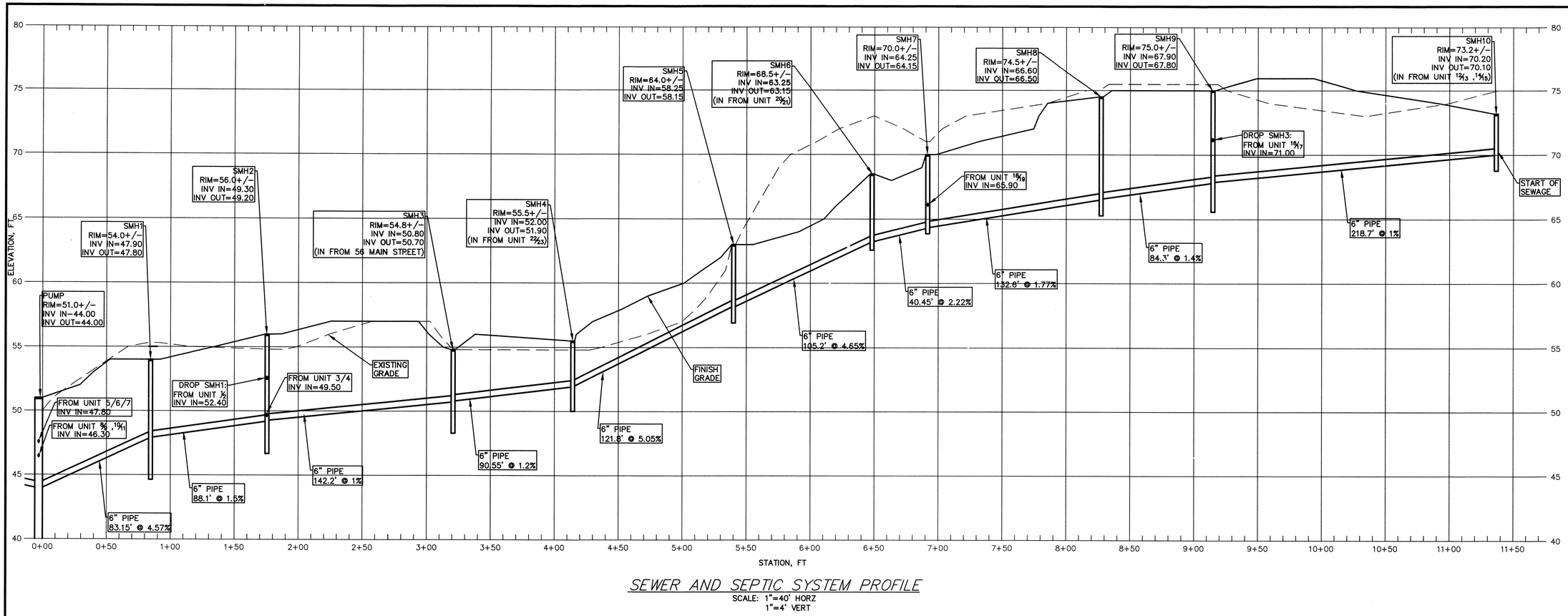

SEWER AND SEPTIC SYSTEM PROFILE

SCALE: 1"=40' HORZ
1"=4' VERT

UNIT 10/11 TO PUMP

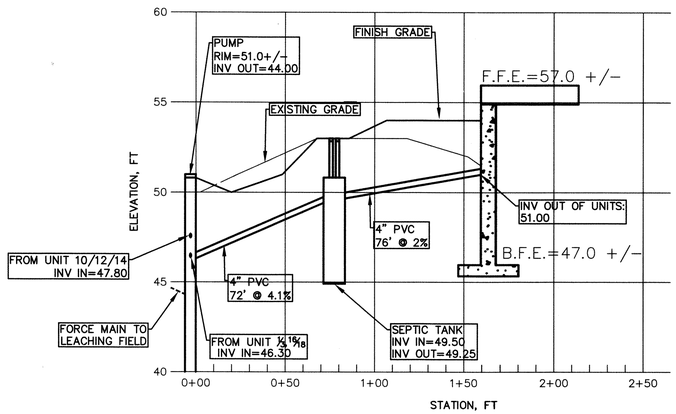

UNIT 1/2 TO SMH2

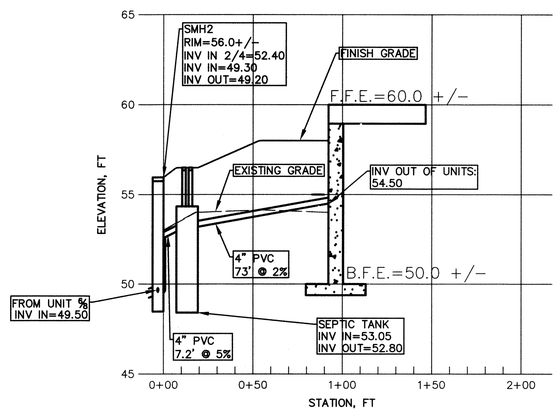

SEWER AND SEPTIC SYSTEM PROFILE

SCALE: 1"=40' HORZ
1"=4' VERT

UNIT 16/17 TO SMH9

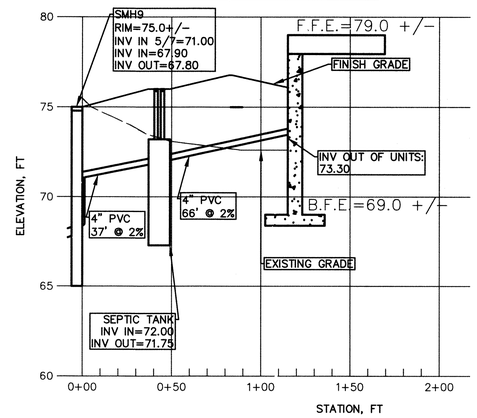

NOTE:
REFER TO 'COMBINED UTILITIES' FOR LOCATION OF MANHOLES AND PUMP

GRAPHIC SCALE: 1 INCH = 40 FEET
0 20 40 80 160

PROJECT NAME:
WENHAM PINES
56 & 60 Main Street
Wenham, MA 01984

APPLICANT:
WENHAM PINES LLC.
6 Kimball Lane
Lynnfield, MA 01940

OWNER:
ESTATE OF WILLIAM J. FLYNN
5 Barker Road
Boxford, MA 01921

HANCOCK ASSOCIATES
Civil Engineers
Land Surveyors
Wetland Scientists
185 CENTRE STREET, DANVERS, MA 01923
VOICE (978) 777-3050, FAX (978) 774-7816
WWW.HANCOCKASSOCIATES.COM

COMMONWEALTH OF MASSACHUSETTS
VACLAV V. TALACKO
CIVIL
No. 34028
REGISTERED PROFESSIONAL ENGINEER
10/7/16

NO.	BY	APP	DATE	ISSUE/REVISION DESCRIPTION
1	JPC	RAT	10/5/16	PLANNING BOARD COMMENTS

DATE:	7/19/2016	DESIGN BY:	VVT
SCALE:	AS SHOWN	DRAWN BY:	TRD
APPRVD. BY:	RAT	CHECK BY:	

SEWAGE PROFILE 1

PLOT DATE: Oct 10, 2016 6:26 pm
PATH: F:\Civil 3D Projects\19400\DWG\

DWG: 19400C1 160930.dwg
LAYOUT: PRO-1
SHEET: 20 OF 36
PROJECT NO.: 19400

UNIT 3/4 TO SMH2

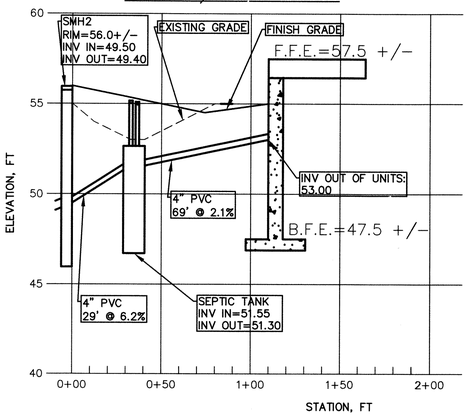

UNIT 18/19 TO SMH7

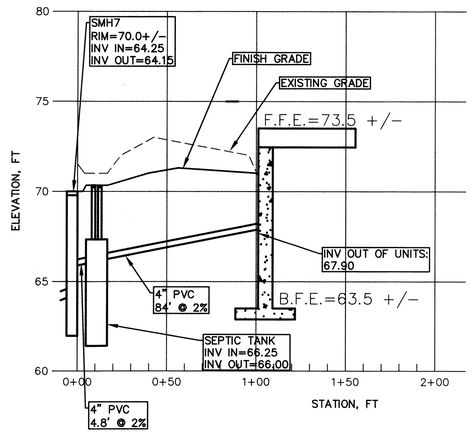

UNIT 5/6/7 TO PUMP

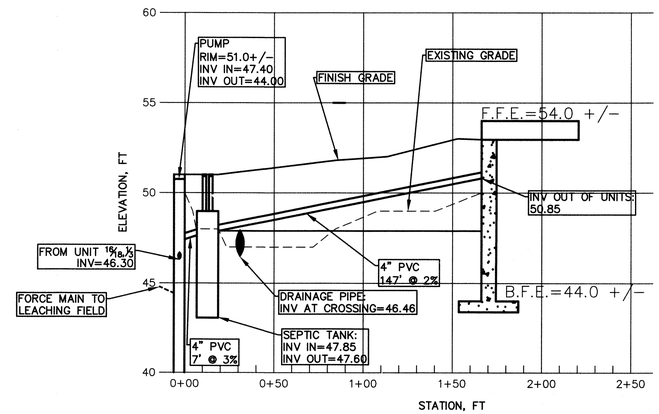

UNIT 8/9 TO PUMP

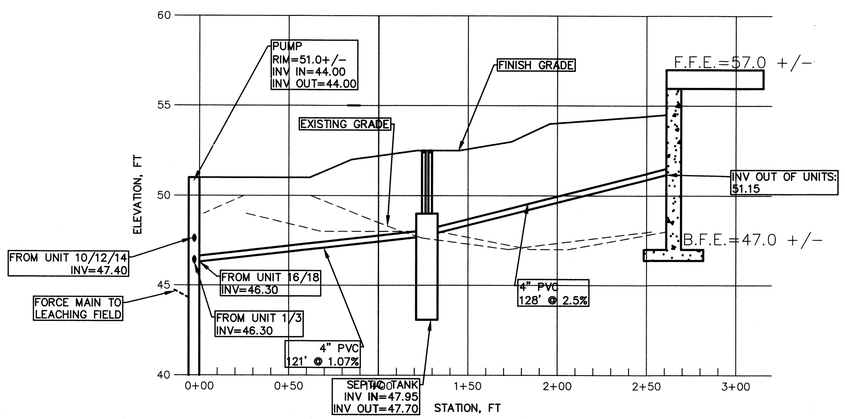

UNIT 12/13 TO SMH10

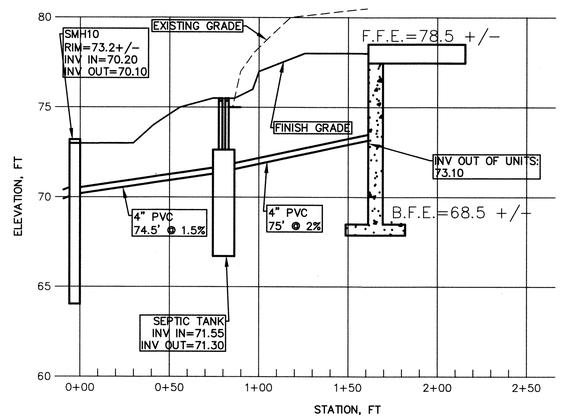

SEWER AND SEPTIC SYSTEM PROFILES

SCALE: 1"=40' HORZ
1"=4' VERT

NOTE:
REFER TO 'COMBINED UTILITIES' FOR LOCATION OF MANHOLES AND PUMP

GRAPHIC SCALE: 1 INCH = 40 FEET
0 20 40 80 160

PROJECT NAME:

WENHAM PINES

56 & 60 Main Street
Wenham, MA 01984

APPLICANT:

WENHAM PINES LLC.

6 Kimball Lane
Lynnfield, MA 01940

OWNER:

ESTATE OF WILLIAM J. FLYNN

5 Barker Road
Boxford, MA 01921

HANCOCK ASSOCIATES

Civil Engineers

Land Surveyors

Wetland Scientists

185 CENTRE STREET, DANVERS, MA 01923
VOICE (978) 777-3050, FAX (978) 774-7816
WWW.HANCOCKASSOCIATES.COM

COMMONWEALTH OF MASSACHUSETTS
VACLAV V. TALACKO
CIVIL
No. 34026
REGISTERED PROFESSIONAL ENGINEER
10/7/16

NO.	BY	APP	DATE	ISSUE/REVISION DESCRIPTION
1	JPC	RAT	10/5/16	PLANNING BOARD COMMENTS

DATE:	7/19/2016	DESIGN BY:	VVT
SCALE:	AS SHOWN	DRAWN BY:	TRD
APPRVD. BY:	RAT	CHECK BY:	

SEWAGE PROFILE 2

PLOT DATE: Oct 10, 2016 6:26 pm
PATH: F:\Civil 3D Projects\19400\DWG\

DWG: 19400C1 160930.dwg
LAYOUT: PRO-2
SHEET: 21 OF 36
PROJECT NO.: 19400

UNIT 20/21 TO SMH6

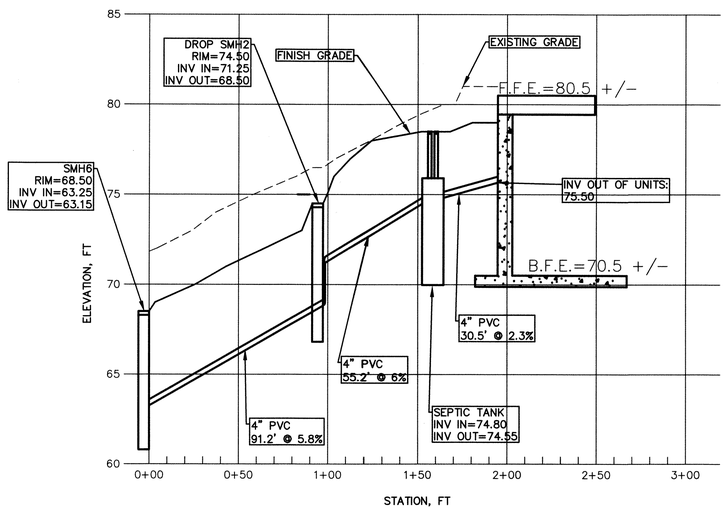

UNIT 22/23 TO SMH4

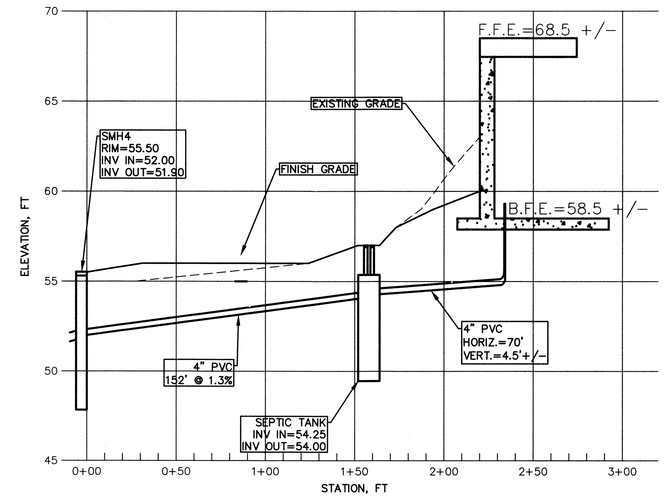

UNIT 14/15 TO SMH10

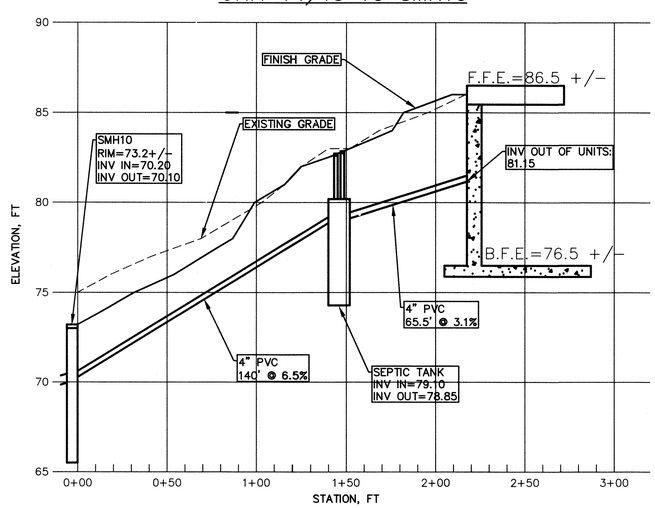

RENOVATED RESIDENTIAL BUILDING @ 56 MAIN STREET TO SMH3

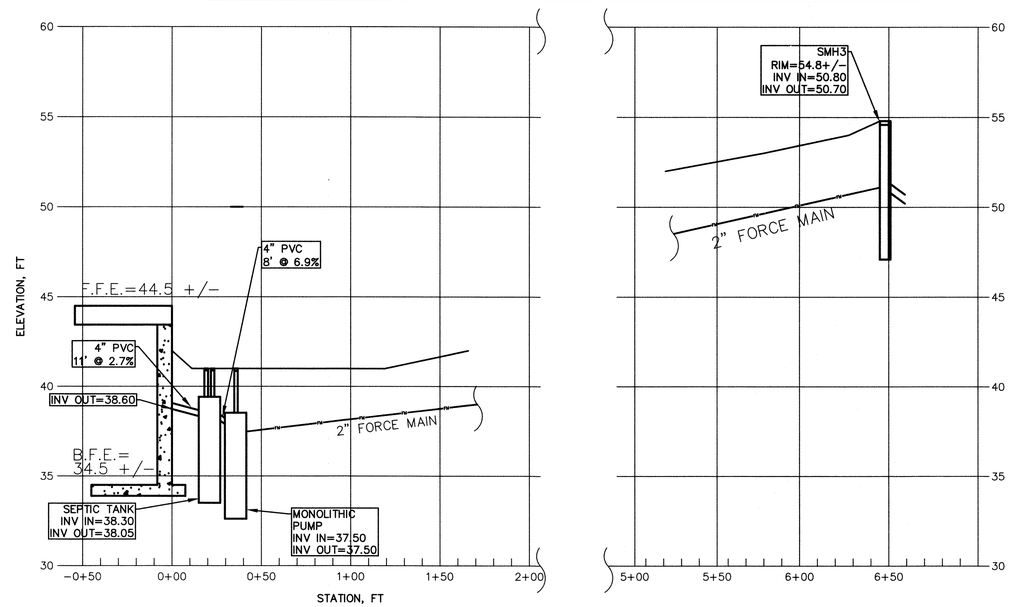

NOTE:
REFER TO 'COMBINED UTILITIES' FOR LOCATION OF MANHOLES AND PUMP

SEWER AND SEPTIC SYSTEM PROFILES

SCALE: 1"=40' HORZ
1"=4' VERT

GRAPHIC SCALE: 1 INCH = 40 FEET
0 20 40 80 160

PROJECT NAME:

WENHAM PINES

56 & 60 Main Street
Wenham, MA 01984

APPLICANT:

WENHAM PINES LLC.

6 Kimball Lane
Lynnfield, MA 01940

OWNER:

ESTATE OF WILLIAM J. FLYNN

5 Barker Road
Boxford, MA 01921

HANCOCK ASSOCIATES

Civil Engineers

Land Surveyors

Wetland Scientists

185 CENTRE STREET, DANVERS, MA 01923
VOICE (978) 777-3050, FAX (978) 774-7816
WWW.HANCOCKASSOCIATES.COM

COMMONWEALTH OF MASSACHUSETTS
VACLAV V. TALACKO
CIVIL
No. 34926
REGISTERED PROFESSIONAL ENGINEER
10/7/16

NO.	BY	APP	DATE	ISSUE/REVISION DESCRIPTION
1	JPC	RAT	10/5/16	PLANNING BOARD COMMENTS

DATE: 7/19/2016	DESIGN BY: VVT
SCALE: AS SHOWN	DRAWN BY: TRD
APPRVD. BY: RAT	CHECK BY:

SEWAGE PROFILE 3

PLOT DATE: Oct 10, 2016 6:26 pm
PATH: F:\Civil 3D Projects\19400\DWG\

DWG: 19400C1 160930.dwg
LAYOUT: PRO-3
SHEET: 22 OF 36

PROJECT NO.: 19400

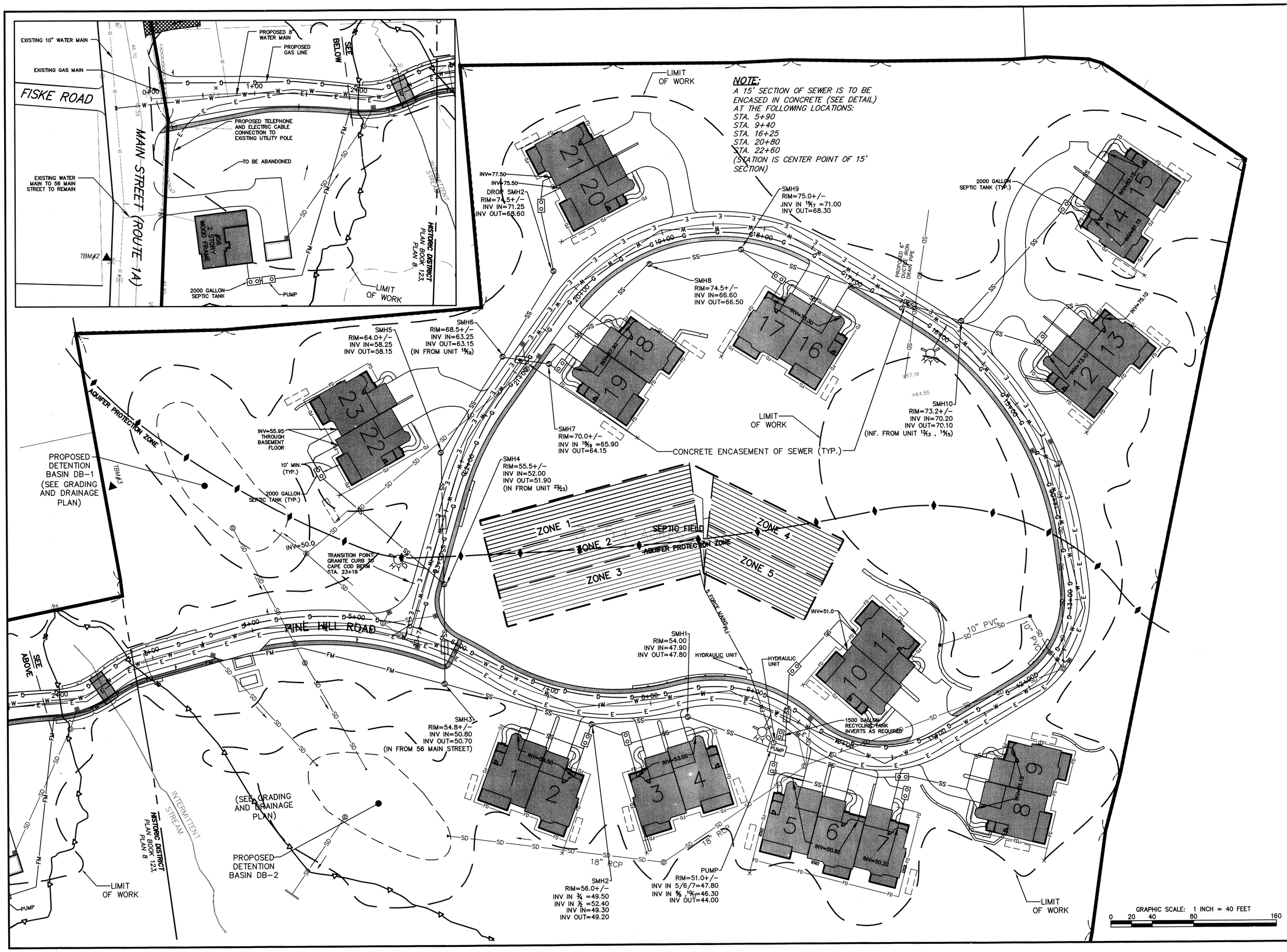

PROJECT NAME:

WENHAM PINES

56 & 60 Main Street
Wenham, MA 01984

APPLICANT:

WENHAM PINES LLC.

6 Kimball Lane
Lynnfield, MA 01940

OWNER:

ESTATE OF WILLIAM J. FLYNN

5 Barker Road
Boxford, MA 01921

HANCOCK ASSOCIATES

Civil Engineers

Land Surveyors

Wetland Scientists

185 CENTRE STREET, DANVERS, MA 01923
VOICE (978) 777-3050, FAX (978) 774-7816
WWW.HANCOCKASSOCIATES.COM

COMMONWEALTH OF MASSACHUSETTS
VACLAV V. TALACKO
CIVIL
No. 34926
REGISTERED PROFESSIONAL ENGINEER
10/7/16

NO.	BY	APP	DATE	ISSUE/REVISION DESCRIPTION
1	JPC	RAT	10/5/16	PLANNING BOARD COMMENTS

DATE:	7/19/2016	DESIGN BY:	RAT
SCALE:	AS SHOWN	DRAWN BY:	JPC
APPRVD. BY:	VVT	CHECK BY:	RAT

COMBINED UTILITIES

PLOT DATE: Oct 10, 2016 6:27 pm
PATH: F:\Civil 3D Projects\19400\DWG\

DWG: 19400C1 16093D.dwg
LAYOUT: UTILITIES
SHEET: 23 OF 36

CU

PROJECT NO.: 19400

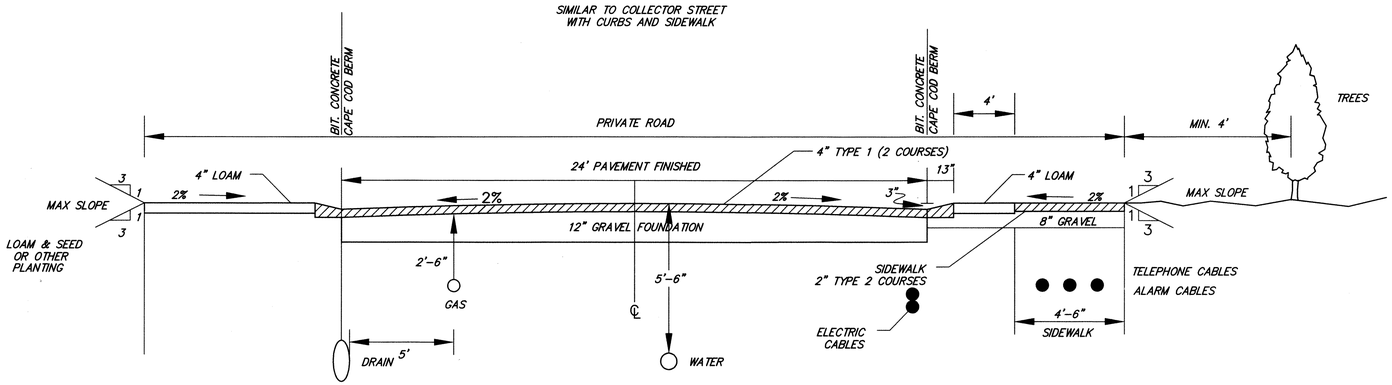

PINE HILL ROAD (PRIVATE ROAD)

TYPICAL CROSS SECTION (EXACT UTILITY LOCATIONS DO VARY FROM TYPICAL CROSS SECTION)
NOT TO SCALE

NOTE:
SECTION OF NEW ROADWAY WHICH CONNECTS TO MAIN STREET (STA 0+00 TO STA 5+90) WILL HAVE VERTICAL GRANITE CURB (6" REVEAL) ON BOTH SIDES INSTEAD OF BITUMINOUS CAPE COD BERM WHICH WILL BE INSTALLED ON THE REMAINDER OF THE ROADWAY SYSTEM.

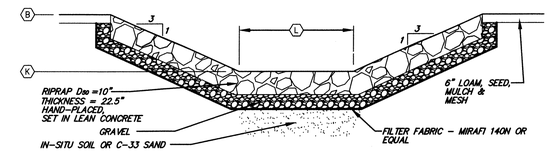

CROSS-SECTION - EMERGENCY SPILLWAY THROUGH BERM

SEE SCHEDULE B

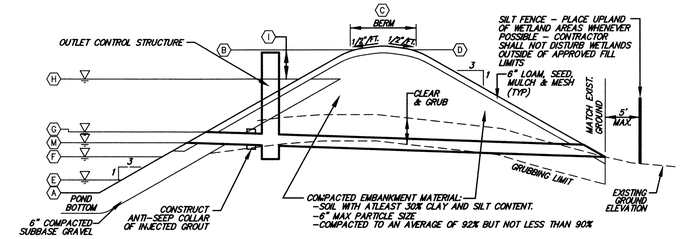

SECTION THROUGH RETENTION/DETENTION FACILITY

SEE SCHEDULE B

SCHEDULE B - EMBANKMENT STRUCTURE

	DIMENSION / ELEVATION	DIMENSION / ELEVATION
	BASIN #1	BASIN #2
(A) POND BASE ELEVATION	47.8	42.0
(B) TOP OF BASIN AT INSIDE OF BERM ELEVATION	52.8	47.0
(C) WIDTH OF BERM	5' MIN. AND 10' FOR ACCESS TO THE OUTLET STRUCTURE	5' MIN. AND 10' FOR ACCESS TO THE OUTLET STRUCTURE
(D) TOP OF BASIN AT OUTSIDE OF BERM ELEVATION	52.8	47.0
(E) 2-YEAR STAGE ELEVATION	48.0	42.0
(F) 10-YEAR STAGE ELEVATION	48.5	43.1
(G) 25-YEAR STAGE ELEVATION	49.1	44.0
(H) 100-YEAR STAGE ELEVATION	50.6	45.5
(I) FREEBOARD (100-YR. STORM)	1.7'	1.9'
(K) CREST OF SPILLWAY ELEVATION	52.3	47.4
(L) WIDTH OF SPILLWAY	10'	10'
(M) BASIN OUTLET PIPE	48.1	46.0

NOTES:
1. BOTTOM OF DETENTION BASINS TO BE APPROVED BY ENGINEER PRIOR TO INSTALLATION OF FILTER FABRIC.
2. SILT LOAM LAYER FOUND IN TEST PITS AT DETENTION POND 2 SHALL BE REMOVED AND REPLACED WITH C-33 SAND.

DETENTION BASIN

TYPICAL CROSS SECTION
NOT TO SCALE

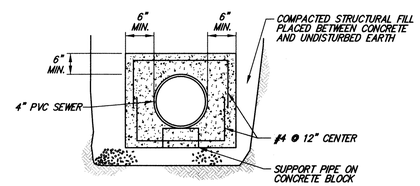

NOTE: REINFORCING STEEL TO BE USED ONLY WHEN DEPTH OF COVER TO TOP OF SURFACE OF CONCRETE IS 5'-0" OR LESS

CONCRETE ENCASEMENT FOR PIPE

TYPICAL CROSS SECTION
NOT TO SCALE

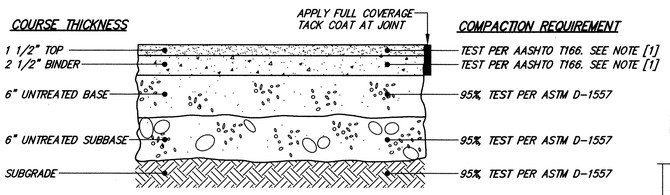

NOTES:
[1] COMPACT TO TEST AVERAGE OF 96%, NO TEST LOWER THAN 94%

MATERIAL	SPECIFICATION	MAXIMUM AGGREGATE OR PARTICLE SIZE (IN.)
TOP - BITUMINOUS CONCRETE	MDOT M3.11.03 CLASS I, TYPE I-1	1/2
BINDER- BITUMINOUS CONCRETE	MDOT M3.11.03 CLASS I, TYPE I-1	1
BASE - PROCESSED GRAVEL	MDOT M1.03.1	3
SUBBASE	MDOT M1.03.1	3
UNSUITABLE SUBGRADE - ORDINARY BORROW	MDOT M1.01.0	12

BITUMINOUS CONCRETE PAVEMENT

TYPICAL CROSS SECTION
NOT TO SCALE

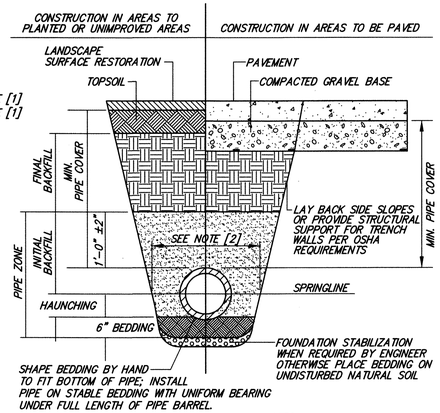

FOUNDATION, BEDDING, & BACKFILL MATERIALS		
PIPE MATERIAL	HDP, PVC	RC, DI
FOUNDATION STABILIZATION	[6]	[6]
BEDDING	[1]	[1]
HAUNCHING	[1]	[1]
INITIAL BACKFILL	[1]	[1]
FINAL BACKFILL	[4]	[4]
MIN. PIPE COVER	[5]	[5]

NOTES:
[1] PLACE 3/4"± GRADED GRANULAR BACKFILL AT OPTIMUM MOISTURE IN HORIZONTAL, 8"-DEEP, LOOSE LAYERS; COMPACT TO 95% PER ASTM D-1557.
[2] MINIMUM WIDTH OF TRENCH MEASURED AT THE SPRINGLINE OF THE PIPE, INCLUDING ANY NECESSARY SHEATHING:

PIPE I.D.	WIDTH
LESS THAN 21"	O.D. + 12"
21" TO 42"	O.D. + 24"
GREATER THAN 42"	O.D. + 30"

[3] INSTALL PIPE IN CENTER OF TRENCH.
[4] IN PLANTED OR UNIMPROVED AREAS, USE ON-SITE EXCAVATED MATERIAL FOR FINAL BACKFILL. COMPACT TO 95% PER ASTM D-1557. IN PAVED AREAS, OBTAIN ENGINEER APROVAL OF ON-SITE EXCAVATED MATERIALS FOR USE AS FINAL BACKFILL.
[5] MINIMUM COVER OVER TOP OF PIPE:

PIPE MATERIAL	HDP, PVC	RC, DI
WATER	5'-0"	5'-0"
SEWER	4'-0"	4'-0"
DRAIN	1'-6"	1'-0"

[6] FOR FOUNDATION STABILIZATION, USE 2"± CRUSHED STONE.

PIPE TRENCH

TYPICAL CROSS SECTION
NOT TO SCALE

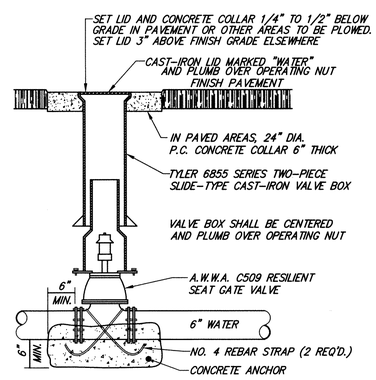

VALVE BOX

TYPICAL CROSS SECTION

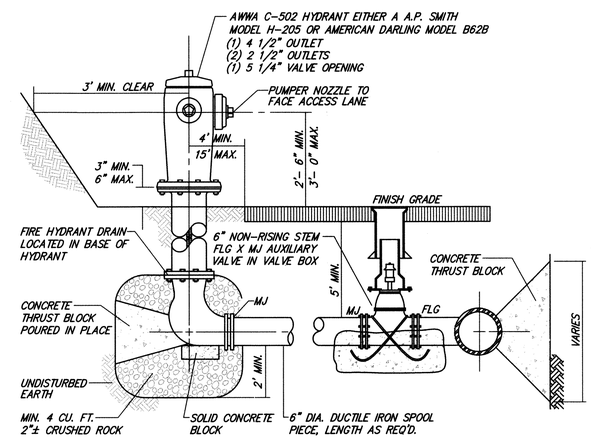

FIRE HYDRANT ASSEMBLY

TYPICAL CROSS SECTION
NOT TO SCALE

PROJECT NAME:
WENHAM PINES
56 & 60 Main Street
Wenham, MA 01984

APPLICANT:
WENHAM PINES LLC.
6 Kimball Lane
Lynnfield, MA 01940

OWNER:
ESTATE OF WILLIAM J. FLYNN
5 Barker Road
Boxford, MA 01921

HANCOCK ASSOCIATES
Civil Engineers
Land Surveyors
Wetland Scientists
185 CENTRE STREET, DANVERS, MA 01923
VOICE (978) 777-3050, FAX (978) 774-7816
WWW.HANCOCKASSOCIATES.COM

COMMONWEALTH OF MASSACHUSETTS REGISTERED PROFESSIONAL ENGINEER TIMOTHY V. MAHONEY No. 34026 CIVIL
10/7/16

NO.	BY	APP	DATE	ISSUE/REVISION DESCRIPTION
1	JPC	RAT	10/5/16	PLANNING BOARD COMMENTS

DATE:	7/19/2016	DESIGN BY:	RAT
SCALE:	AS SHOWN	DRAWN BY:	RD
APPRVD. BY:	VVT	CHECK BY:	RAT

SITE DETAILS 1

PLOT DATE: Oct 10, 2016 6:28 pm
PATH: F:\Civil 3D Projects\19400\DWG\

DWG: 19400C1 160930.dwg
LAYOUT: DETAILS1
SHEET: 24 OF 36

SD-1

PROJECT NO.: 19400

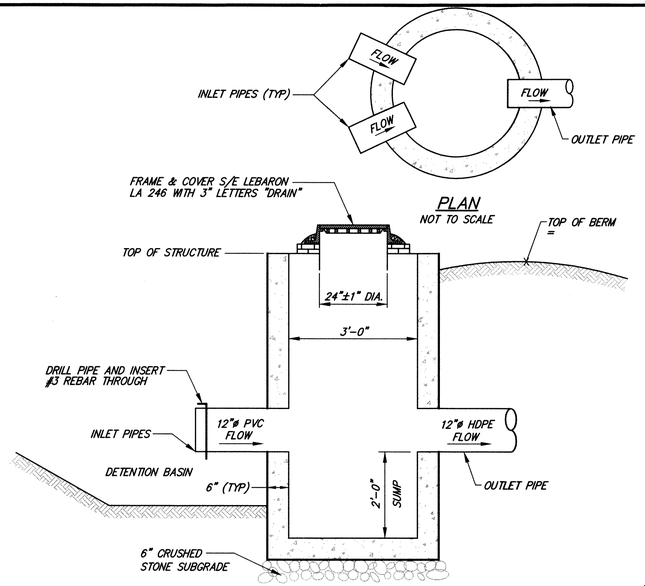

OUTLET CONTROL STRUCTURE

NOT TO SCALE

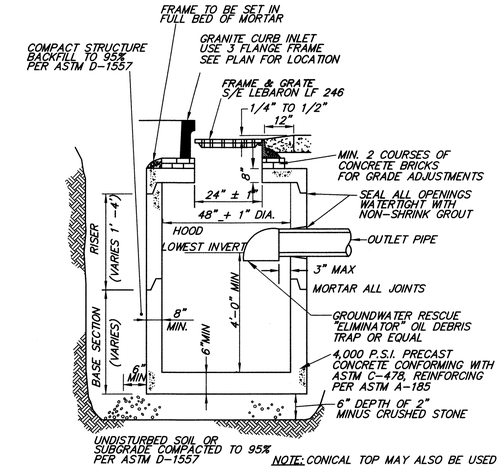

CATCH BASIN

TYPICAL CROSS SECTION
NOT TO SCALE

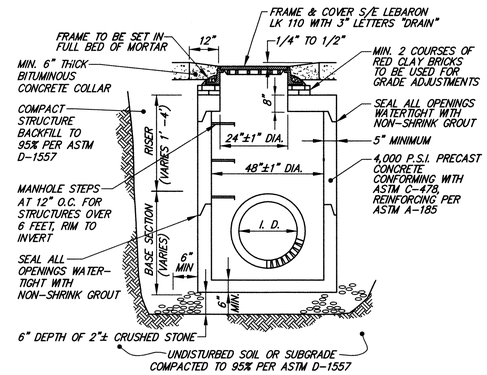

DRAIN MANHOLE

TYPICAL CROSS SECTION
NOT TO SCALE

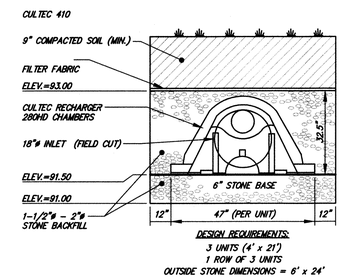

ROOF DRAIN INFILTRATION SYSTEM

NOT TO SCALE

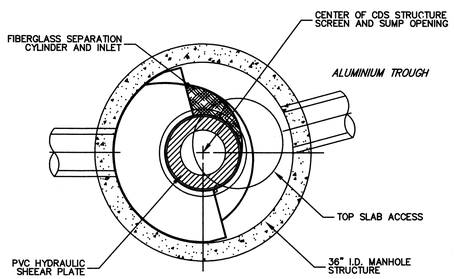

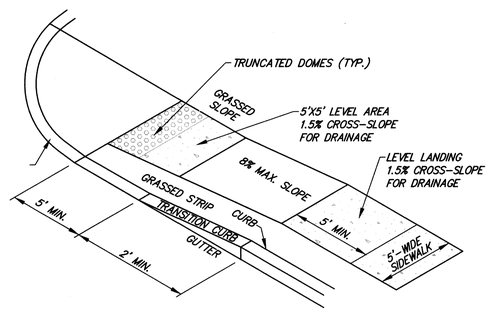

HANDICAP RAMP ISOMETRIC VIEW

NOT TO SCALE

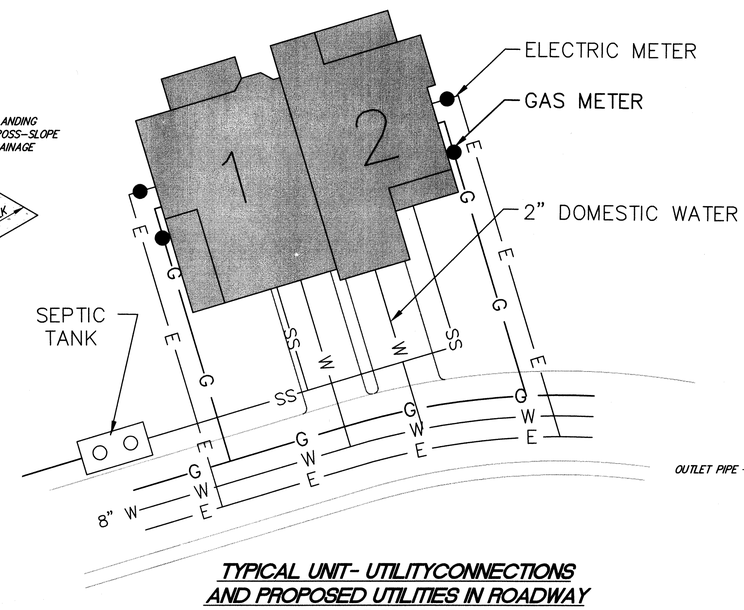

TYPICAL UNIT- UTILITYCONNECTIONS AND PROPOSED UTILITIES IN ROADWAY

NOT TO SCALE

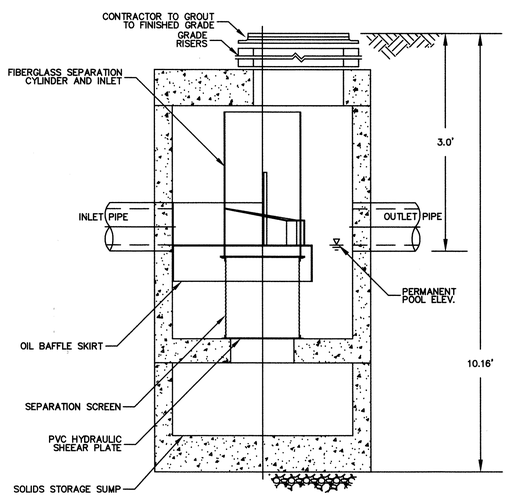

CONTECH/STORMWATER SOLUTIONS

NOT TO SCALE

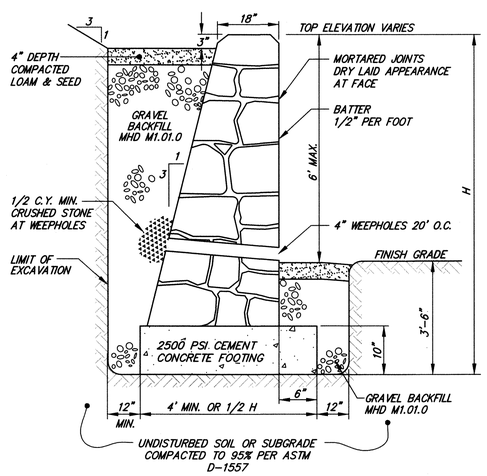

FIELDSTONE RETAINING WALL

CROSS SECTION
NOT TO SCALE

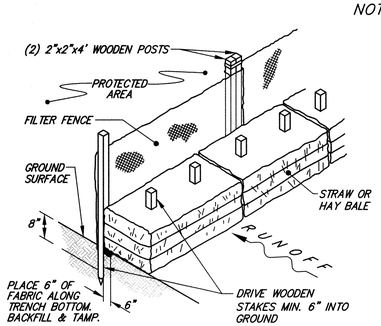

HAY BALE AND SILT FENCE BARRIER

ISOMETRIC VIEW
NOT TO SCALE

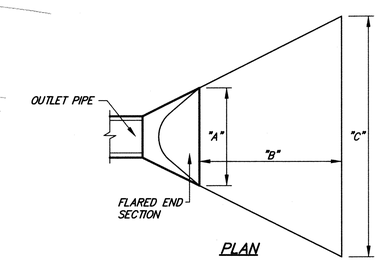

PLAN

DIMENSION	12" D-BASIN INLET
"A"	36"
"B"	14'
"C"	15'
LARGEST STONE	6"
APRON DEPTH	10"

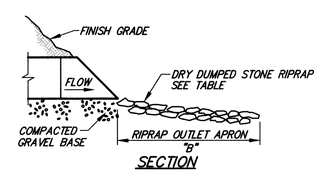

SECTION

DRAIN OUTLET AND APRON

TYPICAL CROSS SECTION
NOT TO SCALE

PROJECT NAME:

WENHAM PINES

56 & 60 Main Street
Wenham, MA 01984

APPLICANT:

WENHAM PINES LLC.

6 Kimball Lane
Lynnfield, MA 01940

OWNER:

ESTATE OF WILLIAM J. FLYNN

5 Barker Road
Boxford, MA 01921

HANCOCK ASSOCIATES

Civil Engineers

Land Surveyors

Wetland Scientists

185 CENTRE STREET, DANVERS, MA 01923
VOICE (978) 777-3050, FAX (978) 774-7816
WWW.HANCOCKASSOCIATES.COM

NO.	BY	APP	DATE	ISSUE/REVISION DESCRIPTION
1	JPC	RAT	10/5/16	PLANNING BOARD COMMENTS

DATE:	7/19/2016	DESIGN BY:	RAT
SCALE:	AS SHOWN	DRAWN BY:	RD
APPRVD. BY:	VVT	CHECK BY:	RAT

SITE DETAILS 2

PLOT DATE: Oct 10, 2016 6:28 pm
PATH: F:\Civil 3D Projects\19400\DWG\

DWG: 19400C1 160930.dwg
LAYOUT: DETAILS2
SHEET: 25 OF 36

SD-2

PROJECT NO.: 19400

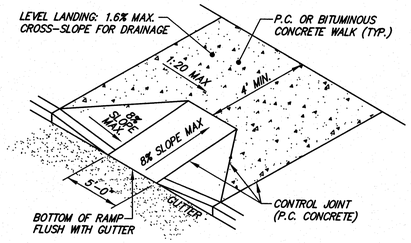

NOTE:
SIDEWALK RAMPS MUST COMPLY WITH THE AMERICANS WITH DISABILITIES ACT AND THE MASSACHUSETTS HIGHWAY DEPARTMENT WHEELCHAIR RAMP STANDARDS (REV. OCT. 8, 1997).

HANDICAP RAMP
ISOMETRIC VIEW
NOT TO SCALE

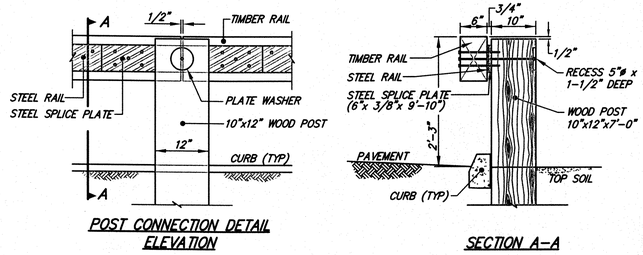

STEEL-BACKED GUARDRAIL w/WOOD POST
TYPICAL CROSS SECTION
NOT TO SCALE

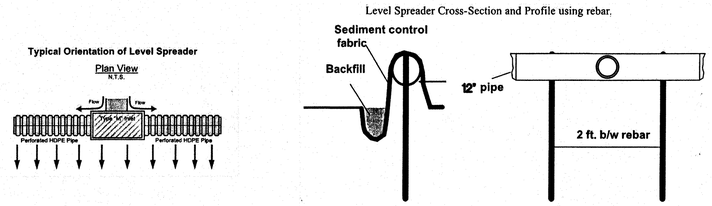

LEVEL SPREADER DETAIL
NOT TO SCALE

DIA.	A	B	C	D	E	R
12"	4"	2'-0"	4'-0.07"	2'-0"	2"	9"
15"	6"	2'-3"	3'-10"	2'-6"	2.25"	11"
18"	9"	2'-3"	3'-10"	3'-0"	2.5"	12"
24"	9.5"	3'-7.5"	2'-6"	4'-0"	3"	14"
30"	12"	4'-6"	1'-7.75"	5'-0"	3.5"	15"
36"	15"	5'-3"	2'-10.75"	6'-0"	4"	20"
42"	21"	5'-3"	2'-11"	6'-6"	4.5"	22"
48"	24"	6'-0"	2'-2"	7'-0"	5"	22"
54"	27"	5'-5"	2'-11"	7'-6"	5.5"	24"
60"	30"	5'-0"	3'-3"	8'-0"	6"	24"

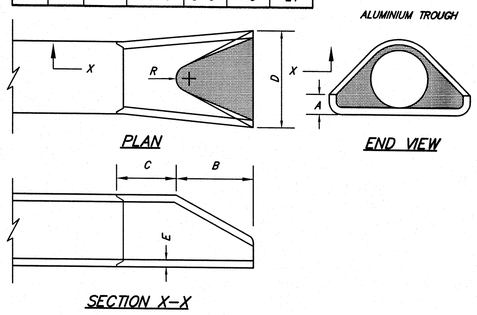

PRECAST REINFORCED CONCRETE END SECTION
NOT TO SCALE

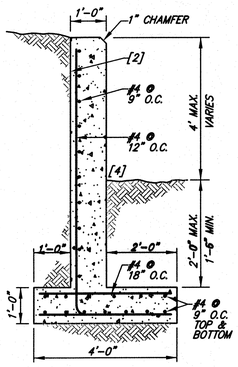

NOTES:
[1] ALL REBAR SHALL HAVE 3" MINIMUM CONCRETE COVER.
[2] THE UPHILL SIDE OF THE WALL SHALL BE COVERED BY 2 COATS OF BITUMINOUS WATERPROOFING PAINT.
[3] CONCRETE SHALL BE 3000 PSI STRENGTH AT 28 DAYS.
[4] THERE SHALL BE NO WEEP HOLES IN THE WALL.
[5] CONSTRUCTION OF THE RETAINING WALL SHALL BE SUPERVISED BY DESIGN ENGINEER.
[6] AN AS-BUILT PLAN SHALL BE PREPARED AND CERTIFIED BY THE DESIGN ENGINEER.
[7] UNDISTURBED NATURAL SOIL, OR SUBGRADE COMPACTED TO 95% PER ASTM D-1557.
[8] A BUILDING PERMIT IS REQUIRED FOR CONSTRUCTION OF WALLS GREATER THAN 4 FEET HIGH.
[9] RETAINING WALL SHALL BE LOCATED BY A REGISTERED LAND SURVEYOR AND CERTIFIED ON AS-BUILT PLAN.
[10] FINAL DESIGN MAY BE REVISED BY STRUCTURAL ENGINEER.

CONCRETE RETAINING WALL
NOT TO SCALE

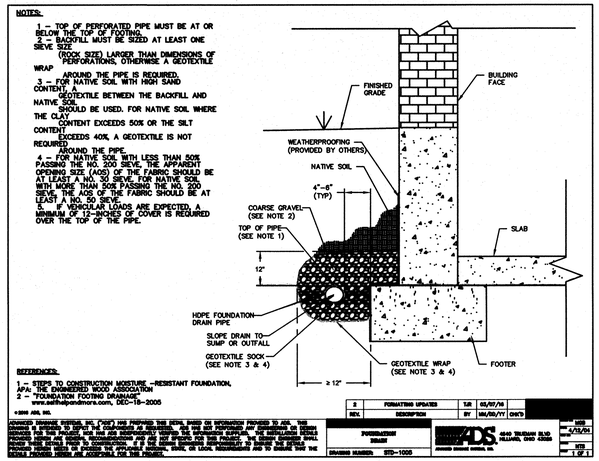

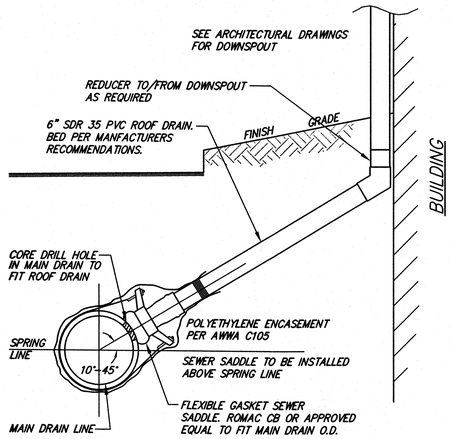

ROOF DRAIN CONNECTION
NOT TO SCALE

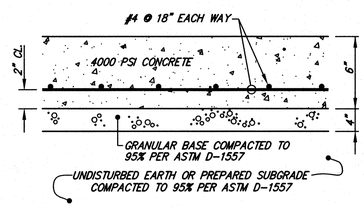

CONCRETE PAD
TYPICAL CROSS SECTION
NOT TO SCALE

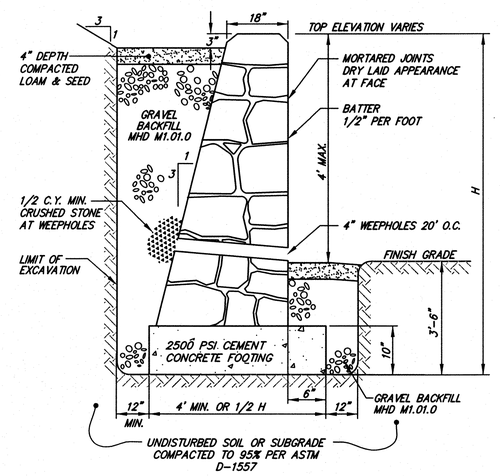

FIELDSTONE RETAINING WALL
CROSS SECTION
NOT TO SCALE

PROJECT NAME:
WENHAM PINES
56 & 60 Main Street
Wenham, MA 01984

APPLICANT:
WENHAM PINES LLC.
6 Kimball Lane
Lynnfield, MA 01940

OWNER:
ESTATE OF WILLIAM J. FLYNN
5 Barker Road
Boxford, MA 01921

HANCOCK ASSOCIATES
Civil Engineers
Land Surveyors
Wetland Scientists
185 CENTRE STREET, DANVERS, MA 01923
VOICE (978) 777-3050, FAX (978) 774-7816
WWW.HANCOCKASSOCIATES.COM

MASSACHUSETTS REGISTERED PROFESSIONAL ENGINEER NO. 34026 RICHARD A. TALMONI CIVIL
10/7/16

NO.	BY	APP	DATE	ISSUE/REVISION DESCRIPTION
1	JPC	RAT	10/5/16	PLANNING BOARD COMMENTS

DATE:	7/19/2016	DESIGN BY:	RAT
SCALE:	AS SHOWN	DRAWN BY:	RD
APPRVD. BY:	VVT	CHECK BY:	RAT

SITE DETAILS 3

PLOT DATE: Oct 10, 2016 6:28 pm
PATH: F:\Civil 3D Projects\19400\DWG\

DWG: 19400C1 160930.dwg	SD-3
LAYOUT: DETAILS3	
SHEET: 26 OF 36	
PROJECT NO.: 19400	